ClearSpan™
Storage Master Elite Garages

30' Wide

Photo shows a different but similar model.

STK#	DIMENSIONS
107771	30' W x 15' H x 24' L
107772	30' W x 15' H x 28' L
107773	30' W x 15' H x 36' L
107774	30' W x 15' H x 44' L

WARNING: Cancer and Reproductive Toxicity - P65Warnings.ca.gov

Revision date: 02.14.23

READ THIS DOCUMENT BEFORE YOU BEGIN

Thank you for purchasing this ClearSpan™ shelter. When properly assembled and maintained, this product will provide years of reliable service. These instructions include helpful hints and important information needed to safely assemble and properly maintain the shelter. Please read these instructions ***before*** you begin.

If you have any questions during the assembly, contact Customer Service for assistance.

SAFETY PRECAUTIONS

- Wear eye protection.
- Wear head protection.
- Wear gloves when handling metal tubes.
- Use a portable GFCI (Ground Fault Circuit Interrupter) when working with power tools and cords.
- Do not climb on the shelter or framing during or after construction.
- Do not occupy the shelter during high winds, tornadoes, or hurricanes.
- Provide adequate ventilation if the structure is enclosed.
- Do not store hazardous materials in the shelter.
- Provide proper ingress and egress to prevent entrapment.

QUICK START GUIDE

For a quick overview of this shelter and its components, consult the Quick Start Guide at the back of these instructions.

LOCATION

Choosing the proper location is an important step before you begin to assemble the structure.

The following suggestions and precautions will help you determine whether your selected location is the best location.

- Never erect the structure under power lines.
- Identify whether underground cables and pipes are present *before* preparing the site or anchoring the structure.
- Location should be away from structures that could cause snow to drift on or around the building.
- Do not position the shelter where large loads such as snow and ice, large tree branches, or other overhead obstacles could fall.

SITE

After choosing a location, proper preparation of the site is essential. The following site characteristics will help ensure the integrity of the structure.

- *A level site is required.* The site must be level to properly and safely erect and anchor the structure. If the site is not level, construct footings to provide a secure base to assemble the structure. Pre-cast concrete blocks, pressure-treated wood posts, or poured footings are all acceptable when properly used.
- Drainage: Water draining off the structure and from areas surrounding the site should drain away from the site to prevent damage to the site, the structure, and contents of the structure.

WARNING: The individuals assembling this structure are responsible for designing and furnishing all temporary bracing, shoring and support needed during the assembly process. For safety reasons, those who are not familiar with recognized construction methods and techniques must seek the help of a qualified contractor.

ASSEMBLY PROCEDURE

Following the instructions as presented will help ensure the proper assembly of your shelter. Failing to follow these steps may result in an improperly assembled and anchored shelter and will void all warranty and protection the owner is entitled.

The steps outlining the assembly process are as follows:

1. Verify that all parts are included in the shipment. Notify Customer Service for questions or concerns.
2. Read these instructions, the Must Read document, and all additional documentation included with the shipment ***before*** you begin assembling the shelter.
3. Gather the tools, bracing, ladders (and lifts), and assistance needed to assemble the shelter.
4. Check the weather ***before*** you install the roof cover and any panels (if equipped). Do not install covers or panels on a windy or stormy day.
5. Re-evaluate the location and site based on the information and precautions presented in the documentation included with the shipment.
6. Lay out the site (if this has not been completed).
7. Assemble the frame components in the order they are presented in these instructions.
8. Assemble the frame including the struts (if equipped).
9. Consult the Must Read document for anchoring comments and instructions.
10. Assemble and install the cable assemblies (if equipped). These are typically found on larger shelters. Your shelter may include struts or other methods of bracing attached during the frame assembly procedure. (Some shelters do not require cables or struts.)
11. Install, tighten, and secure the end panels (if equipped) and main cover. This applies to fabric covers that stretch over the frame assembly.
12. Read the Care and Maintenance information at the end of these instructions.
13. Complete and return all warranty information as instructed.

LIST OF WORDS AND PHRASES

Before you begin, it is important to become familiar with the words and phrases used in this instruction manual.

These words and phrases are common to most ClearSpan™ shelters and identify the different parts of the shelter. (Some are used in this document. Others may not apply to this particular shelter.)

These terms describe the shipped parts and can also be found on the materials list/spec sheets included with the shipment. To aid in the assembly, read through the following definitions before you begin to assemble your shelter.

- **Conduit:** An assembly of pipes used to secure the main cover and end panels (if equipped). Purlins and some strut assemblies also consist of connected pipes to form a conduit. Each pipe joint of a conduit assembly is secured with a self-tapping Tek screw.
- **Coupler or Fitting:** A part of the frame assembly where legs, purlins and rafter pipes are inserted and secured. In most instances, 3-way and 4-way couplers are used. In some larger applications, couplers are used to secure the joints of the different rafter sections during the assembly of the rafters. Some shelters do not use couplers.
- **Foot or Rafter Foot:** The part attached to and found at the base of the rafter or leg of the shelter. Depending on the shelter, the foot is an optional purchase. Some shelters do not offer an optional foot. Some use 1-way connectors.
- **Must Read Document:** This document includes building and shelter anchoring instructions, steps for end wall reinforcement, safety precautions, and notices and warnings. The Must Read document is sent with all shelters and buildings. If you did not receive a Must Read document, contact Customer Service to request one.
- **On-Center:** Term used to describe a measurement taken from the vertical center of the rafter or frame member to the vertical center of another.
- **Purlin:** The pipe assembly that runs perpendicular to the rafters or framework that supports the main cover. Purlins are found on the sides and roof areas of the assembled frame, are evenly spaced, and typically run from the front to the back of the shelter.
- **Plain or Straight Pipe:** A term used to describe a pipe that has the same diameter or width throughout its entire length.
- **Strut:** A strut is usually a length of pipe with two flattened ends and is used for diagonal bracing of the shelter frame. A strut is typically secured to the frame work by special brackets and bolts.
- **Swaged End or Swaged Pipe:** The term "swaged" refers to the tapered end of the pipe or tube. Swaged ends of a pipe can be inserted into couplers and the straight ends of other pipes.
- **Tek Screw:** A self-tapping fastener used to secure pipe joints and to fasten brackets to rafters.

REQUIRED TOOLS

The following list identifies the main tools needed to assemble the shelter. Additional tools and supports may be needed depending on the structure, location, and application.

- Tape measure or measuring device
- Chalk line (optional)
- Marker to mark locations on the pipes
- Variable speed drill and impact driver (cordless with extra batteries works best)
- Metal-cutting tool for pipe
- Magnetic nut setter (3/8" x 2-9/16")
- Wrench, ratchet and socket (recommended)
- Hammers, gloves, ladders, work platforms, and other machinery for lifting designed to work safely at the height of the shelter.

UNPACK AND IDENTIFY PARTS

The following steps will ensure that you have all the necessary parts before you begin to assemble the shelter.

1. Unpack the contents of the shipment and place where you can easily inventory the parts. Refer to the Bill of Materials/Spec Sheets.
2. Verify that all parts listed on the Bill of Materials/Spec Sheets are present. If anything is missing or you have questions, consult the Pictorial Parts Guide and all shelter diagrams for clarification, or contact Customer Service.

   NOTE: At this time, you do not need to open the plastic bags containing the fasteners (if used).

ANCHORING INSTRUCTIONS

Prior to assembling this shelter, please read the *MUST READ* document included with the shipment.

WARNING: The anchor assembly is an integral part of the shelter construction. Improper anchoring may cause shelter instability and failure of the structure. Failing to anchor the shelter properly *will void the manufacturer's warranty* and may cause serious injury and damage.

The diagrams below illustrate two possible ways to properly anchor the shelter to the site.

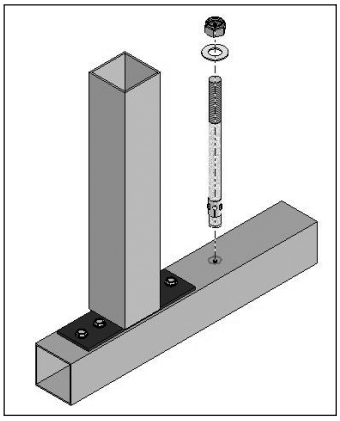

Anchor System
for use on concrete.

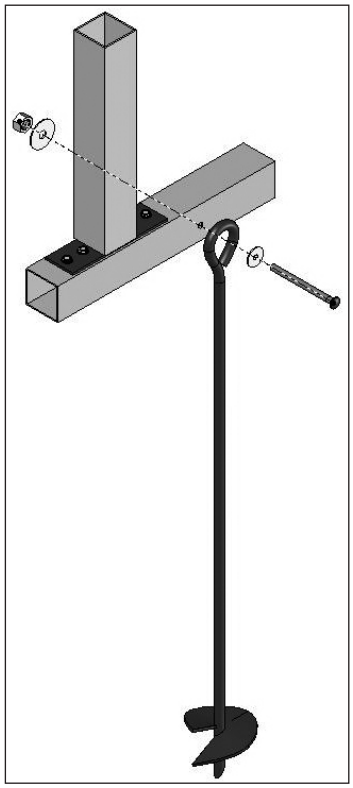

Ground Anchor System

Install an anchor at each rafter leg along each side of the frame.

The parts shown in the diagrams regarding anchor systems are *not included* with the shelter. *Contact Customer Service at 1-800-245-9881 to purchase additional parts to anchor the shelter.*

The following graphics and photos will help identify the different parts used to construct your shelter.
(Some parts are not shown.)

FA4482B
Tek Screw

QH1070
Pipe Strap

102921
Neo-Bonded Washer

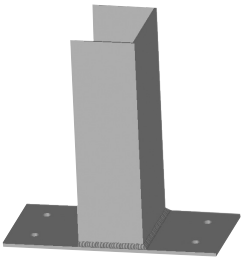

105088
1-Way Connector

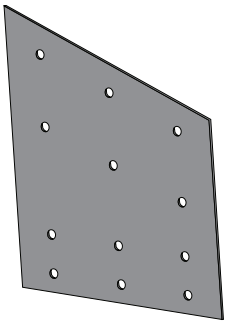

105087
Rafter Connection Plate

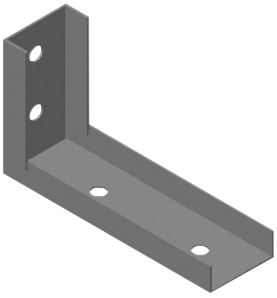

QH1330
Angled Bracket

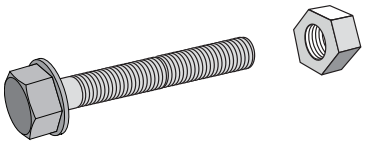

FAG363B 3/8" Bolt
and FALB04B Nut

ClearSpan™ Storage Master Elite Garage

OVERVIEW

This section describes assembling the garage frame. See illustration below to identify main parts of shelter.

1. Locate required parts for each assembly procedure.
2. Assemble and position base rails.
3. Assemble rafters and frame.
4. Square and anchor garage frame.
5. Install struts and shelter bracing.
6. Install end conduits and panels.
7. Attach main cover.

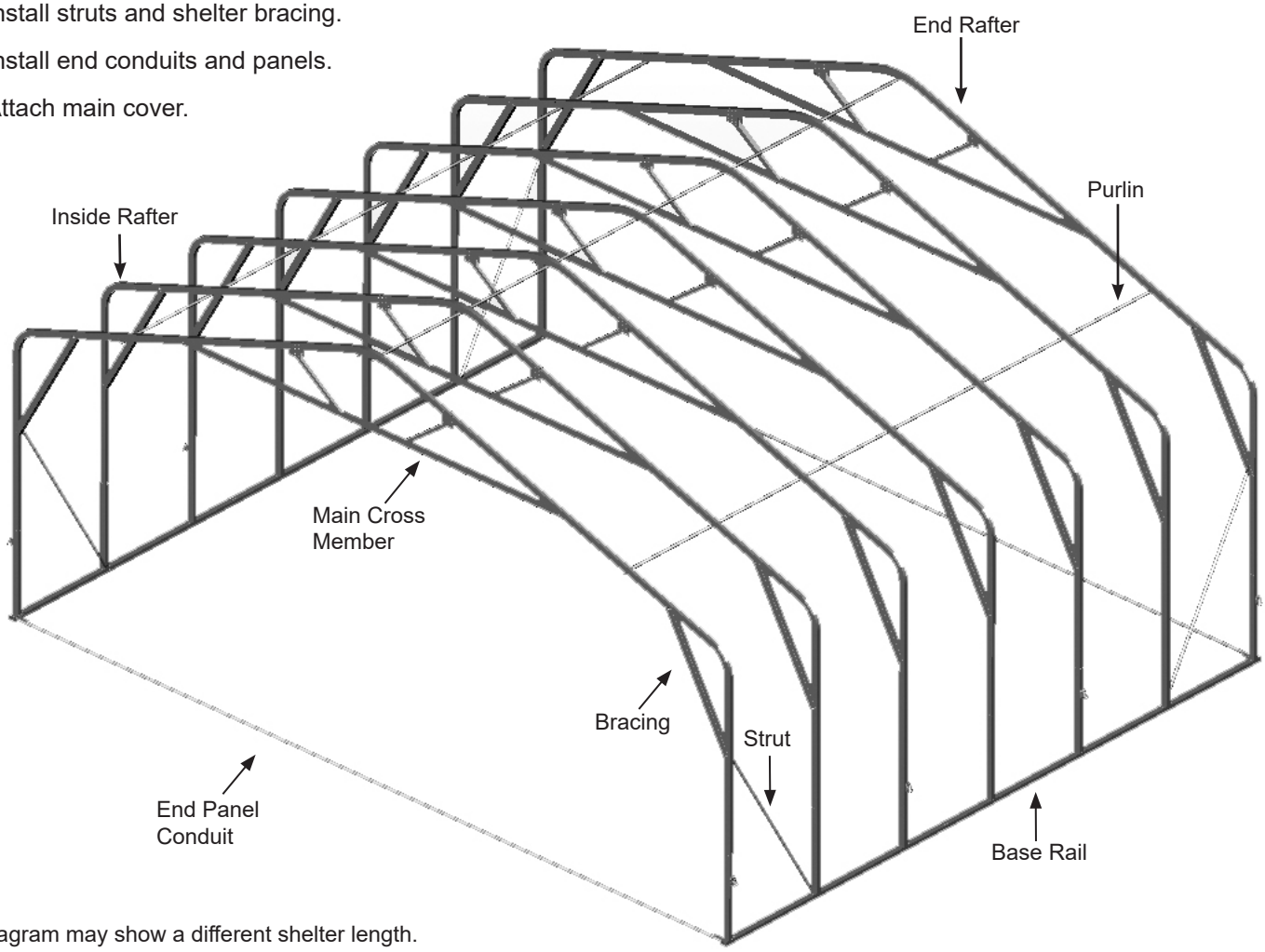

Diagram may show a different shelter length.

LAY OUT THE BUILDING SITE

After the site is prepared, marking the ground where the shelter will be situated and identifying the location of the shelter corners helps to square the frame after it is assembled.

Taking these steps ***before*** assembling the shelter saves time and ensures that the structure is positioned as desired. The following procedure is a suggested method. Its use depends on the size of the shelter, shelter application, the footings, and the method used to anchor the shelter.

This procedure may not be needed for shelters that include a base rail. It can be used, however, as a guide when positioning the frame on the site during assembly.

SQUARE THE SITE

1. Identify a corner where a building rafter or base rail will be positioned, drive in a stake, and string a line the exact width of the building and stake in place.
2. Sting a line at least as long as the building from the first stake at 90°.

   NOTE: A transit can be used to ensure an accurate 90° angle, or the 3-4-5 rule can be used. Refer to diagram. Using multiples of 3-4-5 such as 6-8-10 or 12-16-20 helps to maintain an accurate 90° angle.
3. After squaring the position of the building and placing a stake at all corners, string a line between the stakes to mark the base of the building.

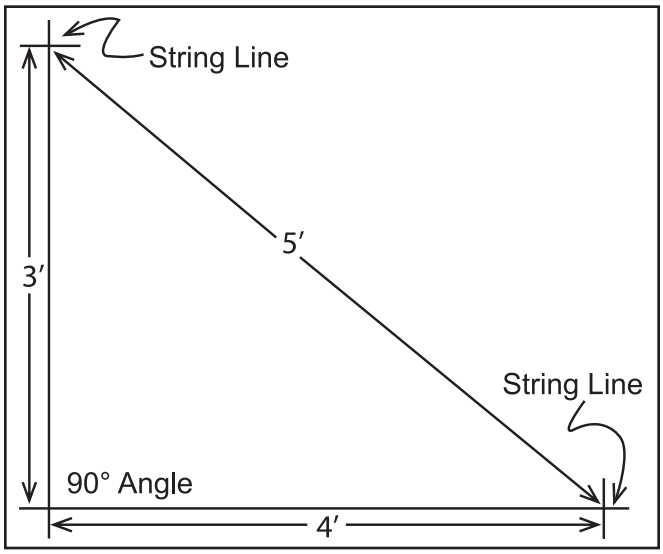

4. Continue with the base rail assembly procedures that follow.

ASSEMBLE AND POSITION BASE RAILS

NOTE: Assistance is required to assemble the garage frame.

Gather the parts:

- Square tubing (see chart below) and 1-way connector (105088)
- Tek screws and magnetic nut setter (3/8" x 2-9/16")

The base rails consist of 2" x 3" square tubing (plain and swaged) and run the length of the building. Each shelter length has a different configuration of 2" x 3" square tubes for the base rails. The tubing requirements *for each base rail* for the different shelter lengths are listed below.

Consult Side Profile Diagrams in the Quick Start Section.

Shelter Length	Tubing Requirement (per base rail)
24'	2 @ 123"S & 54"P
28'	2 @ 123"S & 102"P
36'	3 @ 123"S & 78"P
44'	4 @ 123"S & 54"P

(S = Swaged and P = Plain)

Assemble Base Rails

1. Locate your shelter in the table above and determine the required tubing for each base rail.

   Example: For a shelter that is 36' long, one base rail requires three (3) 123" swaged tubes and one (1) 78" plain tube.
2. Insert the swaged end of each tube into the plain end of a tube until the entire base rail is assembled.

   NOTE: Use a hammer and wood block to lightly tap and seat the tubes together.
3. Repeat the procedure as needed for the remaining base rail.
4. Install one Tek screw at each splice on *each side* of the rail to secure the two tubes.

   Do not install the Tek screws on the top or bottom surface of the base rail.

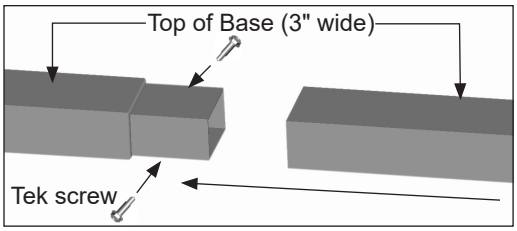

ASSEMBLE AND POSITION BASE RAILS (Continued)

Attach 105088 1-Way Connector (Rafter Feet)

Gather parts:

- Assembled base rails
- 1-way connectors (105088)
- Tek screws and magnetic nut setter (3/8" x 2-9/16")
- Tape measure and marker

NOTE: Before attaching 105088 connectors, verify the heads of the Tek screws securing the base rail tubes are not positioned on the top or bottom surface of the rails.

1. Using Tek screws, attach the first 1-way connector (105088) to base rail top flush with base rail end as shown.

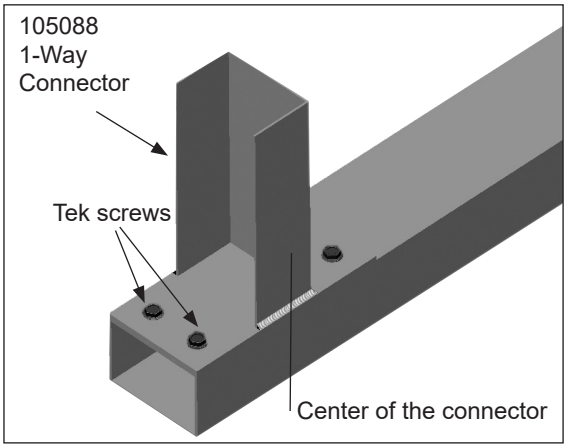

2. From the *center* of the installed 1-way connector (105088), measure and mark 48" increments along the length of the base rail. These marks represent the 4' on-center rafter positions.
3. Center a 1-way connector (105088) on each mark and secure the connector to the rail using Tek screws.
4. Repeat the steps for the remaining base rail.

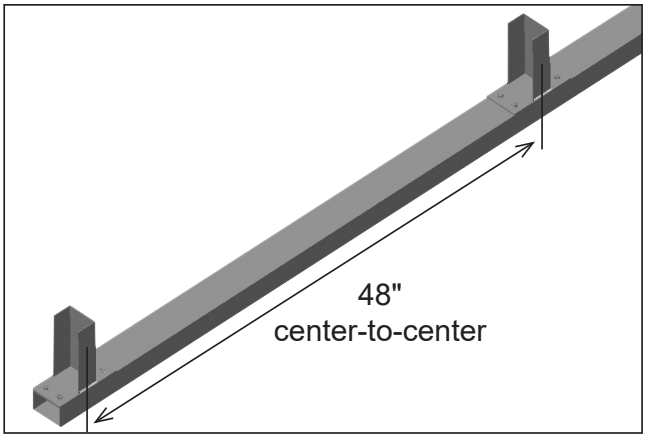

NOTE: Rafter spacing is measured center-to-center.

5. Position base rails on the site where the shelter will be assembled. Space rails at the approximate width of the shelter.

   ATTENTION: *Do not* anchor the rails to the site at this time. The assembled frame will be squared and anchored *after* the rafter and purlins are attached.

6. After the base rails are assembled, continue with the rafter assembly.

RAFTER ASSEMBLY

Gather parts:

- Rafter pipes: 24CP23P3 and 24CP23P1
- Rafter pipes: R23S039 and R23S041
- Rafter pipe 105330 and pipe strap QH1070
- 105090 brace and square tube pipes S20P030
- 105488096 (8' C-channel) and S20P012 (2" x 2") square tube for cross support and cross support splice
- Rafter connection plates 105087
- Tek screws and magnetic nut setter (3/8" x 2-9/16")
- 3/8" x 3" bolts with nuts and lock washers

Rafter Assembly Procedure

Each rafter assembly consists of nine (9) rafter tubes: one (1) curved center pipe (for the top or peak), two (2) bent leg pipes, four (4) straight pipes between the peak and the bent leg pipes, and two (2) at the bottom of the leg pipes.

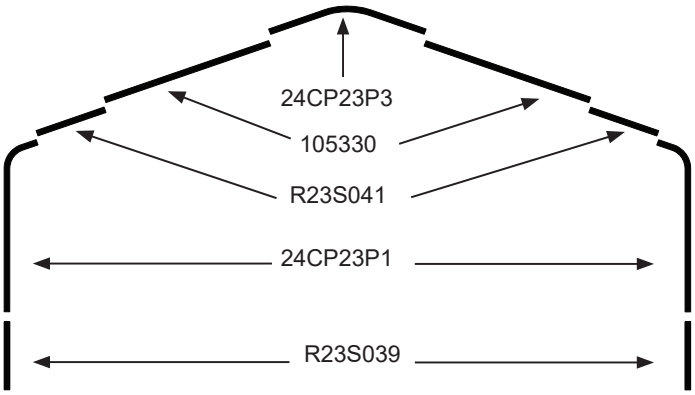

The following steps describe one way to assemble the rafters. Use the previous diagram for rafter tube placement.

IMPORTANT: To prevent damage to the roof panels, ***install the Tek screws so the heads do not touch the roof panels*** when these are installed.

1. Select the tubes needed to assemble the rafter and place these on the ground as shown in the diagram above.
2. Insert the swaged end of the rafter tubes into the plain ends of the rafter tubes as needed to assemble the rafter.

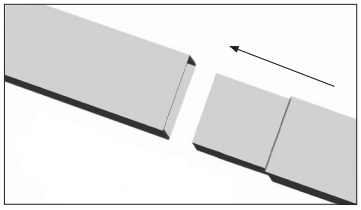

3. Secure each pipe joint using two Tek screws. Verify that the screws are driven through the outer rafter pipe and into the swaged section of the inserted rafter pipe.

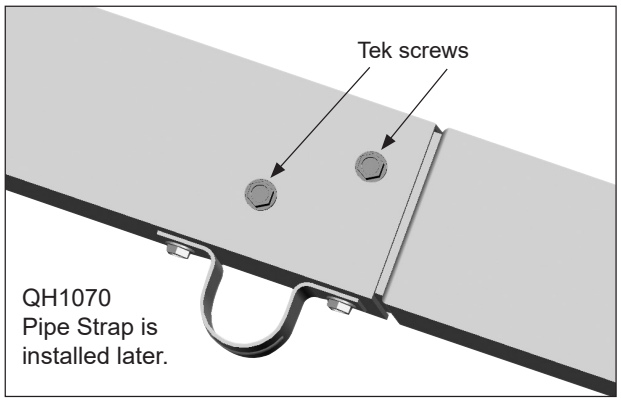

ATTENTION: *Do not secure the two pipe joints circled in the diagram below with Tek screws at this time.* These joints are secured when the connection plates are installed in the steps that follow.

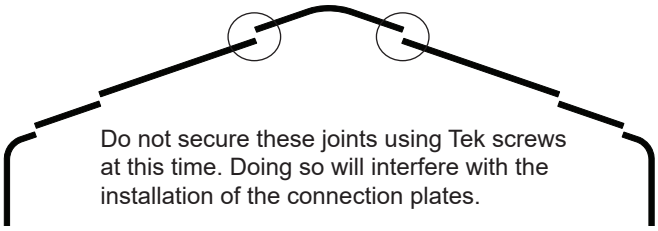

4. Locate three (3) pipe straps (QH1070) and attach each strap to the rafter assembly on the underside of the rafter. Consult the diagram below and the Front Profile diagram in the Quick Start section for pipe strap locations.

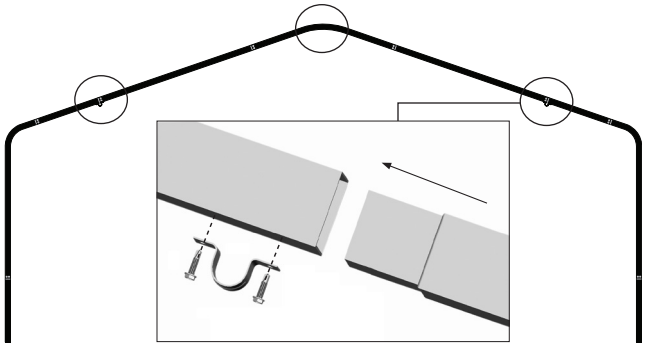

Pipe strap positioned at a rafter joint.

NOTE: The screws used to secure the pipe straps to the rafter are also used to secure the joint of the two rafter tubes. When installing the pipe straps, install screws through one pipe and into the swaged end of the other pipe at joint.

DO NOT tighten the pipe strap screws at this time. These are tightened after installing the purlins.

5. Verify all rafter pipe joints, except those noted in Step 3, are secured using Tek screws.

RAFTER ASSEMBLY (continued)

6. Once rafter tubes for first rafter are assembled and pipe straps (QH1070) are attached to *underside of the rafter tubes*, attach cross support.

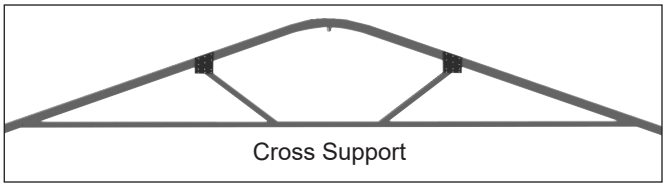

Required components for one (1) rafter cross support:

- Two (2) S20P030 2" x 2" plain square tubes at 30" each
- Two (2) 105488096 8' cross support (C-channels) and one (1) S20P012 Splice Tube
- Four (4) 105087 connection plates with angled top
- Tek screws and 3/8" bolts, nuts, and lock washers

7. Locate two (2) cross support C-channels (105488096) and a S20P012 splice tube.

8. Connect these using three (3) Tek screws ***on each side of splice.*** Total number of Tek screws for each splice is six (6).

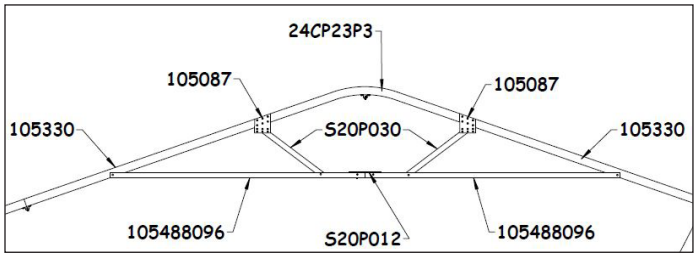

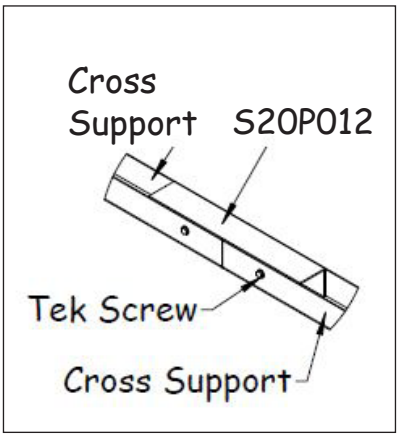

NOTE: Install two (2) Tek screws through bottom, two (2) through front, and two (2) through back of splice for a total of six (6) screws for each cross support splice.

See also the Front Profile diagram in Quick Start section near back of this guide.

9. Position cross support assembly between rafter legs with channel facing up and toward rafter.

10. Align splice with center of rafter and clamp cross support to rafter legs. Verify support is level.

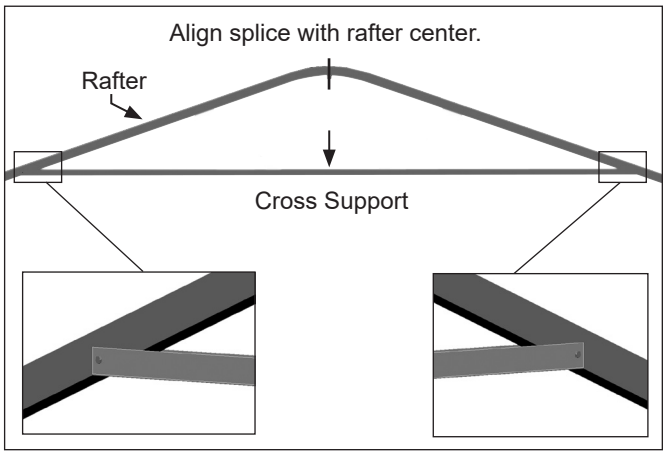

11. Drill a 7/16" hole through the each end of the cross support and rafter as shown below.

12. Attach cross support to the rafter using 3/8" bolts, lock washers, and nuts.

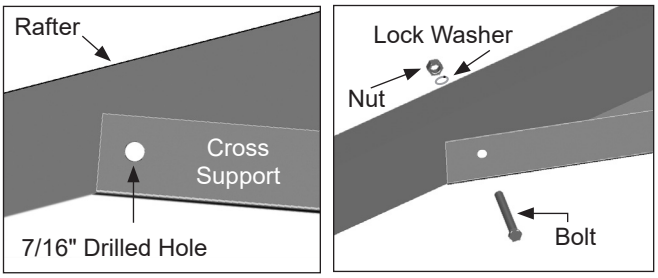

NOTE: Position all nuts on the same side of the rafter. When setting end rafters, ***position nuts to the inside of the frame to prevent end panel damage.***

13. With support attached at each end, measure 16-1/2" *on each side of cross support splice* and mark the locations for the 2" x 2" diagonal braces.

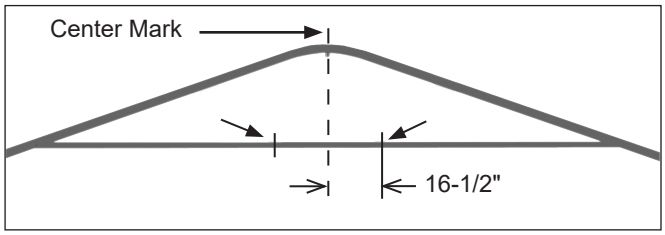

14. Drill a 7/16" hole through the cross support at each location. See the arrows in the above diagram.

15. Take one S20P030 square tube, set one end inside the cross support and align the tube with the 7/16" holes.

16. Tilt remaining end of the tube up until it touches the underside of the rafter.

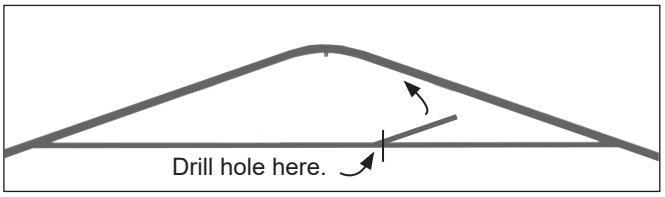

17. While holding the brace in place, use the 7/16" hole in the cross support as a template and mark and drill the hole through the S20P030 diagonal brace.

18. Install the 3/8" bolt, lock washer, and nut to secure the diagonal brace to cross support.

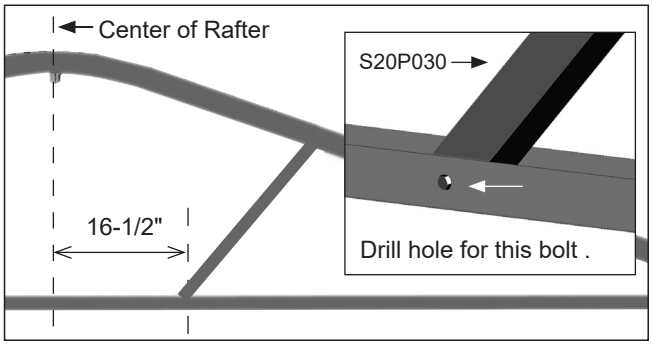

19. With upper end of diagonal brace tight against the underside of rafter, tighten the 3/8" bolt and nut.

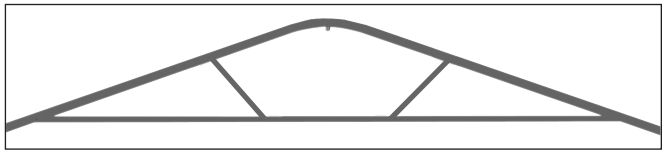

20. Repeat steps to attach the remaining diagonal brace to the cross support. Assembled rafter bracing to this point will appear as shown above.

21. Locate one 105087 connection plate, align it with top edge of rafter and one diagonal brace as shown below. *If screws were installed to secure rafter joint in this location, remove these to install plate.*

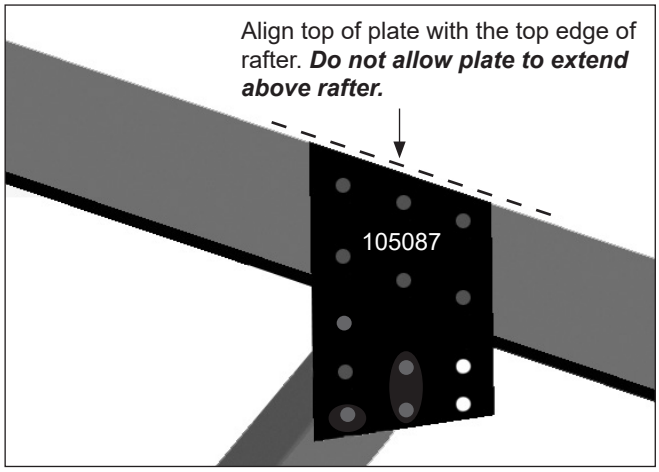

22. Using Tek screws, the magnetic nut setter, and a drill, secure plate to rafter and diagonal brace.

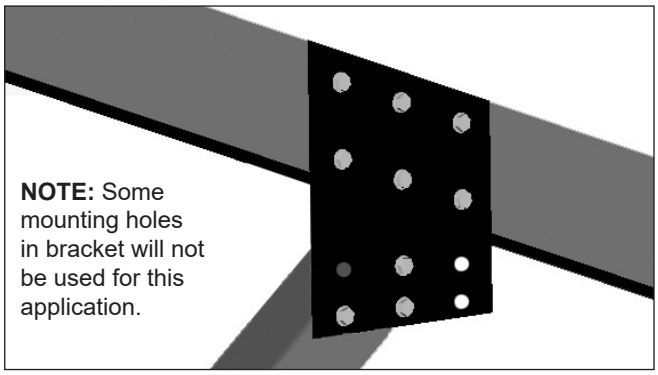

23. Repeat steps to attach another 105087 connection plate to remaining diagonal brace for rafter assembly.

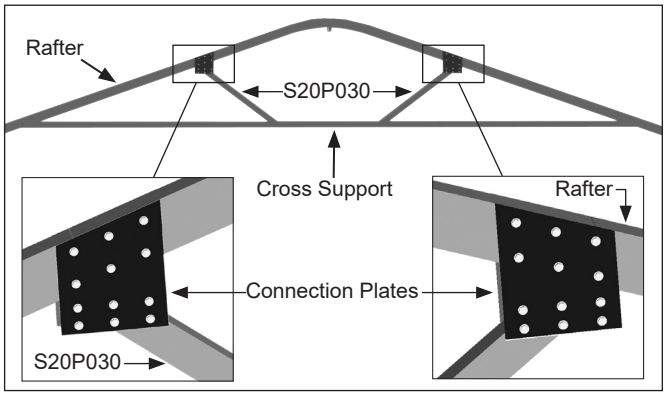

24. After attaching one plate to each diagonal brace on one side of the rafter, carefully flip the rafter assembly over and attach two (2) additional connection plates to secure braces to after on that side.

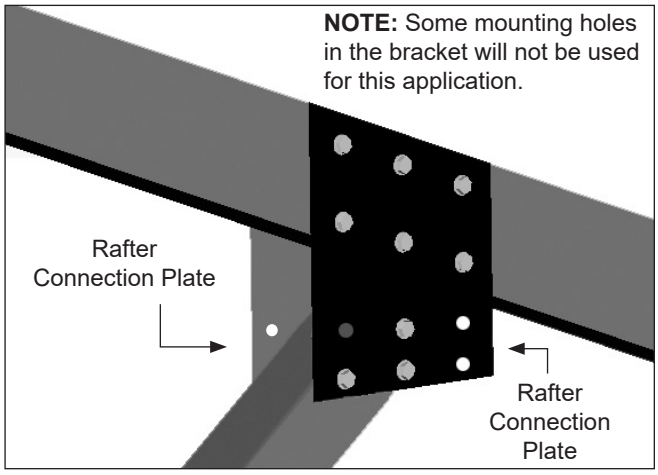

⚠ **WARNING:** Rafters are heavy. ***Assistants and lifts are needed to move assembled rafters.***

25. Set the assembled rafter aside and repeat the procedures to assembly the remaining rafters.

26. After assembling all rafters, assemble the frame.

FRAME ASSEMBLY

The following instructions assume the rafter feet (105088) are properly spaced on base rails as previously instructed and that the site is level. ***A lift is needed to set rafters.***

ATTENTION: Level site before continuing. Frame will not assemble properly without a level site. ***A level site is required.***

Tools needed: Tape measure and power driver for Tek screws; lift to set rafters in place.

Gather parts:

- Rafter assemblies and assembled base rails
- 1.315" x 75" swaged pipe (131S075)
- 1.315" x XX" plain pipe (131P0XX)
- Tek screws and magnetic nut setter (3/8" x 2-9/16")

NOTE: Purlins are part of the assembled frame and run perpendicular to rafter assemblies. Each purlin consists of 1.315" x 75" (131S075) swaged pipes (quantity is determined by shelter length) and one (1) 1.315" x XX" (131P0XX) plain pipe to finish the run of pipe.

The XX" represents remaining length required to reach end of shelter. Consult Spec Sheet and Side Profile diagrams in Quick Start section for part identification.

Assemble Frame

1. Carefully lift and stand the *first rafter* and place leg pipes on the first set of rafter feet on the base rails.

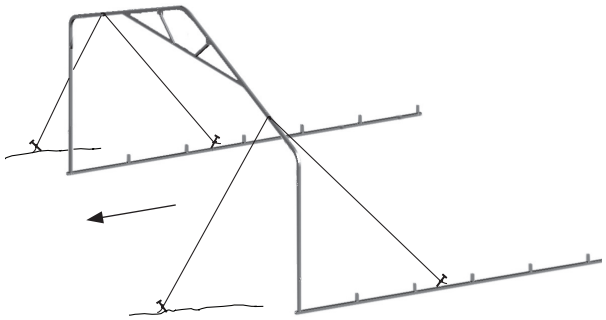

When setting the end rafter, verify that all bolt heads are positioned toward the outside of the frame. See arrow.

2. Anchor the first rafter with ropes or other temporary bracing. *Verify that the rafter is plumb (straight).*

   NOTE: In the diagram (above), ropes (identified by black lines) are used to temporarily anchor rafter in place. *Frame shown may differ from actual frame.*

For this first end rafter, all temporary bracing must remain in place until other rafters are set and attached to the first rafter and each other.

3. Secure rafter leg tubes to each 105088 connector using two Tek screws. Position screws so they "drill" into each connector secured to the base rail.

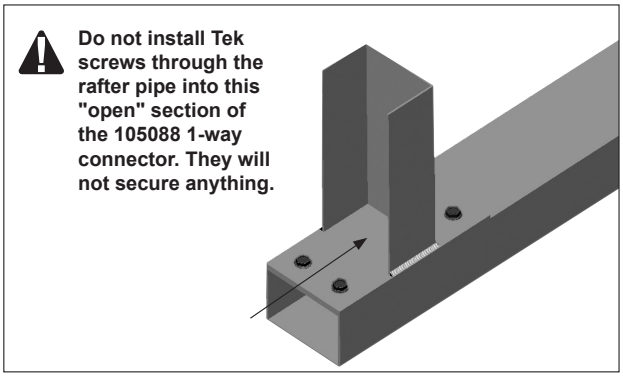

4. Carefully position next rafter in place and secure leg pipes to rafter feet on base rails as previously described.
5. As the second rafter is steadied, take one section of 75" pipe (131S075), move to the rafter peak, and insert pipe through pipe strap attached to the *underside of the end rafter*.
6. Guide tapered end through pipe strap located in the *same position on the second (or next) rafter*.
7. Move to end rafter and align plain end of purlin pipe flush with (or slightly past) outside edge of pipe strap as shown below.

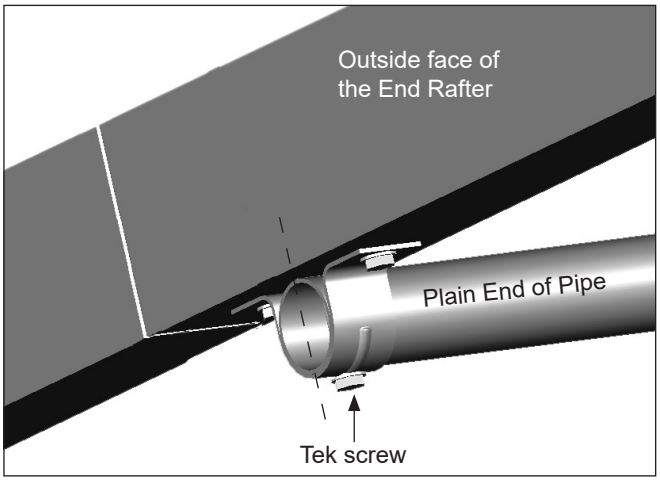

The purlin and rafter position shown may differ from the actual position. It is used to show purlin-to-rafter connection.

8. Tighten pipe strap Tek screws and secure pipe to strap using a Tek screw.

   NOTE: To prevent end panel or cover damage if equipped, ***do not allow the purlin to extend beyond the end rafter.***

FRAME ASSEMBLY (continued)

9. Measure between rafter peaks, verify that the *on-center dimension* is forty-eight inches (48"), and tighten pipe strap Tek screws on second rafter.

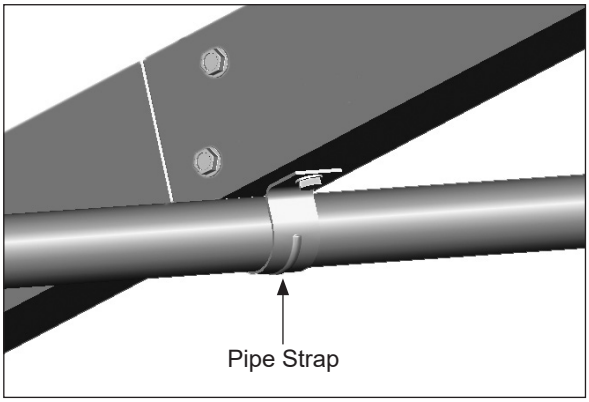

NOTE: *Do not* secure the purlin pipe to the pipe strap on the second rafter at this time.

10. Repeat Steps 5-9 to install the first section of purlin pipe for the remaining purlins for the first two rafters.
11. Choose another rafter assembly and set it in position.
12. Using Tek screws, secure the leg tubes of the third rafter to the 105088 connectors as previously described.
13. Take a 75" section of purlin pipe (131S075), slide it through a pipe strap of the rafter, and place the plain end of the pipe over the tapered end of the installed purlin pipe of the first rafters.
14. Verify that the distance between the rafters is 48" center-to-center. Adjust the rafter forward or backward as needed to maintain this dimension.
15. Tighten pipe strap Tek screws to secure pipe to rafter.
16. Add purlin pipes to complete purlin runs between second and third rafters.
17. Repeat the above steps as needed to stand, place, and secure remaining rafters and purlins to complete the frame assembly.

    Each purlin run is completed using a single plain pipe that is shorter than the 75" swaged pipes used up to this point. (These plain pipes do not include a tapered or swaged end.)

    Consult the Side Profile diagram in the Quick Start section *for your building* to identify the plain pipe at the end of each purlin run.

    If the last rafter is plumb and the purlin pipe extends beyond the end of the rafter, cut the last section of purlin pipe to the required length if needed.

    ATTENTION: *Typically purlin pipes do not need cut. Verify that you have selected the correct pipe to end the purlin run before cutting the pipe to length. Consult the Side Profile diagram for additional details.*

    Do not allow the purlin to extend beyond the end rafter. See earlier diagram (Step 7).

18. Once all rafters are set and all purlins are in place and secured, return to each pipe strap and drive a Tek screw *through the pipe strap and into the purlin*. Refer to the diagram in Step 7 if needed.
19. After securing all purlin pipes to each pipe strap, locate all purlin pipe joints and secure each of these using a Tek screw.

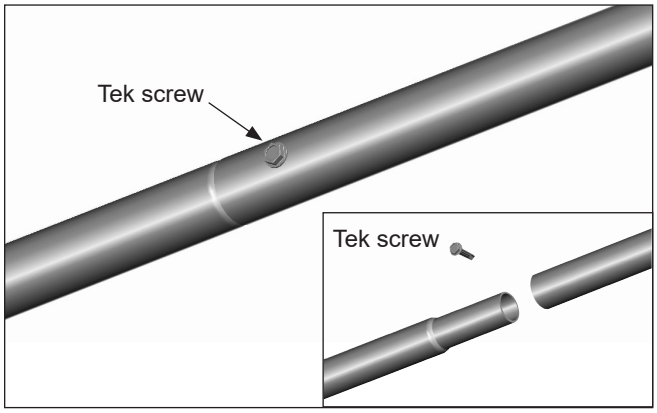

20. Remove the temporary bracing (if needed) and complete the next steps to square and anchor the frame.

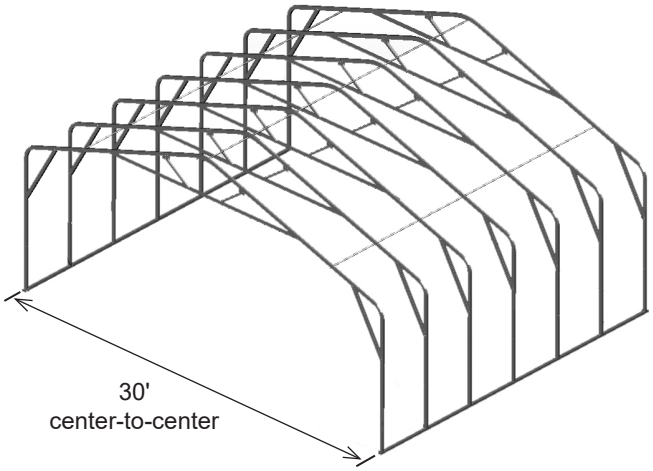

Frame shown may differ from actual frame. It is used for illustration only. Diagonal bracing is installed later in this manual.

SQUARE THE ASSEMBLED FRAME

Complete these steps:

1. Square the frame by measuring diagonally (corner-to-corner) at the base and verify that the two measurements are equal. Adjust as needed.

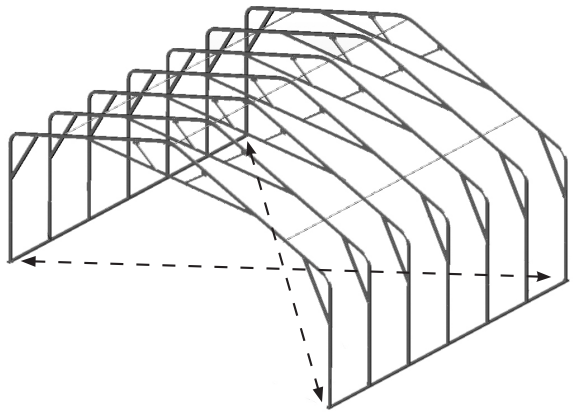

2. Examine the frame and remove any sharp edges from the frame or reposition screws so they do not come in contact with the main cover or end panels (if equipped).
3. Verify that rafters are plumb and the width of the base rails are properly spaced at 30' on-center.
4. Verity that all pipe and tube joints are secured with Tek screws. *This includes base rails, rafters, purlins, and all additional bracing.*
5. After the frame is squared, read or reread the **MUST READ** document and anchor the frame in place.

ANCHOR THE SHELTER

At this point in the assembly process, anchor the assembled frame. Once the frame assembly is anchored properly, continue with these instructions.

WARNING: Securing the base rails to concrete blocks or wood boards set on the site is not a substitute for properly anchoring the shelter. *You must anchor the shelter as described in the MUST READ document.*

FAILING TO PROPERLY ANCHOR THE SHELTER WILL RESULT IN DAMAGE TO THE SHELTER AND MAY CAUSE PERSONAL INJURY.

READ THE MUST READ DOCUMENT TO PROPERLY ANCHOR THE SHELTER.

Consult the services of a qualified contractor familiar with anchoring similar structures in the same region (if needed) to properly anchor the frame.

You must anchor the frame before installing the end panels and main cover.

The diagrams below illustrate two possible ways to properly anchor the shelter to the site. Sample frame shown below may differ from the actual frame.

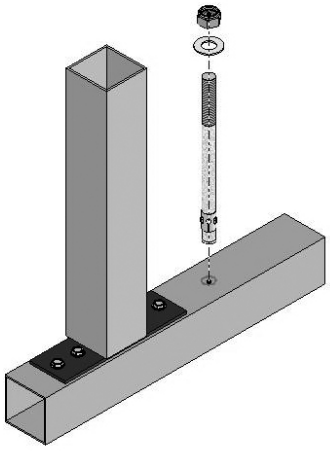

Anchor System for use on concrete

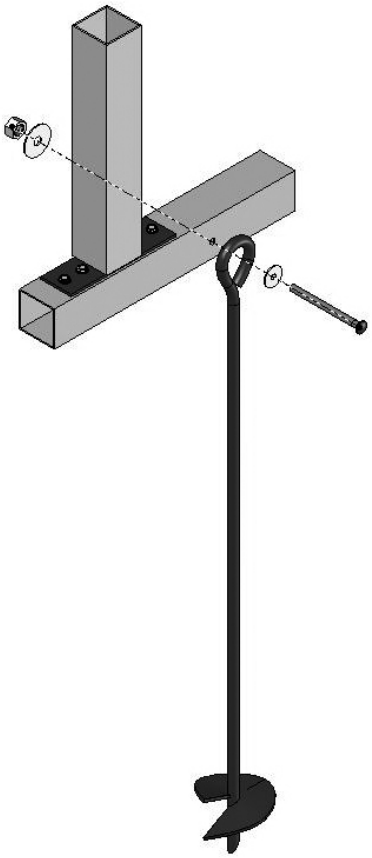

Ground Anchor System

Install an anchor at each rafter leg along each side of the frame.

The parts shown in the diagrams regarding anchor systems are *not included* with the shelter. *Contact Customer Service at 1.800.245.9881 to purchase additional parts to anchor the shelter.*

SIDE STRUT INSTALLATION

Gather parts:

- 8' struts (105119) and Tek screws

Complete these steps to install the four (4) side struts:

1. Locate one (1) eight foot strut and position it between one end rafter leg and the leg of the first interior rafter as shown below.

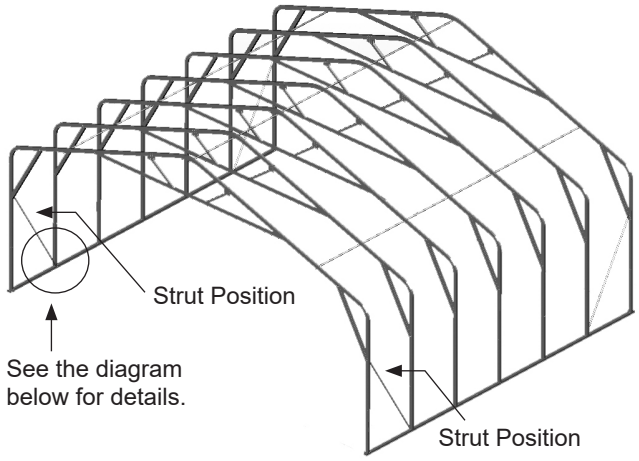

2. Align one end of the strut with the center of the interior rafter leg and *secure the strut to the base rail using Tek screws.* See the diagram that follows for clarification.

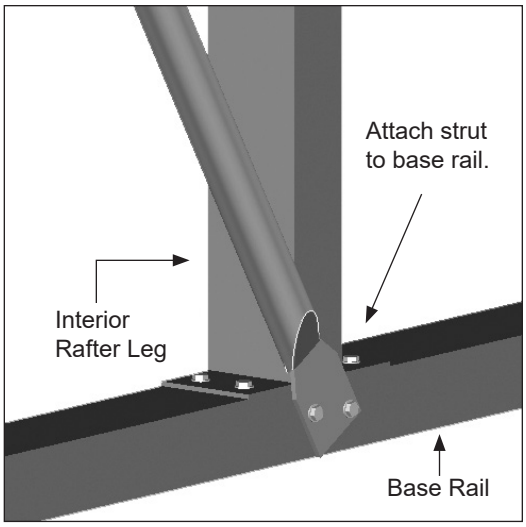

NOTE: Each strut includes one pre-drilled mounting bolt hole at each end. Install a second Tek screw *through the strut and into the base rail as shown*.

3. Verify that the end rafter is plumb (straight up and down) and *secure the top of the strut to the inside of the end rafter leg. Do not allow the end of the strut to extend beyond the edge of the end rafter.*
4. Repeat the steps to attach the remaining side struts to the shelter frame.
5. After securing the four (4) struts, complete the next procedure to install diagonal bracing.

INSTALL SHELTER BRACING

The diagonal bracing is installed *after* the frame is squared and anchored and *before* installing the end panels and main cover.

Gather parts:

- Bracing (105090)
- Tek screws

Complete these steps to install the diagonal bracing for the shelter.

1. Locate one (1) five-foot (5') brace and, beginning at one end rafter, place it into position as shown below.

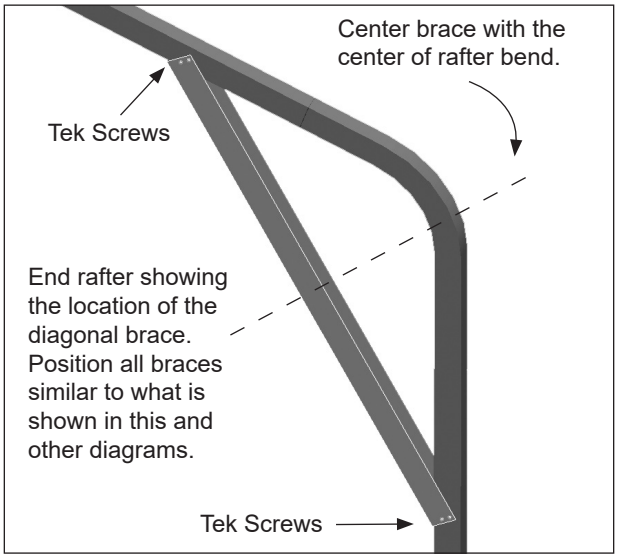

NOTE: Before attaching the brace to the rafter leg, verify that the rafter is plumb (side-to-side and front-to-back).

Position the brace so that the center of the brace is aligned with the center of the rafter bend. Adjust as needed on the end rafters to avoid contact with the strut connections.

2. Secure the brace to the rafter using Tek screws as shown above.
3. Repeat the procedure for the remaining diagonal rafter braces.

NOTE: To keep the angles of all diagonal bracing consistent throughout the frame, duplicate the position of the first diagonal brace.

4. After installing all diagonal bracing, *return to each end rafter* and apply a few layers of duct tape or a similar product over all bolt heads and Tek screw heads. This will protect the end panel when it is installed.
5. Once the end rafters are prepared for end panel installation, continue with the following instructions.

END CONDUITS ASSEMBLY

Gather parts:

- Pipe 1.315" x 73.5" plain and 1.315" x 75" swaged
- QH1330 Angled brackets and Tek screws
- Duct tape (supplied by customer)

Assembly Procedure

1. Locate the required pipes for each end panel conduit and insert the swaged end of one pipe into the plain end of another pipe until the conduit is assembled.

   NOTE: The conduit for each end panel for this shelter consists of the following pipes:
   - Four (4) swaged pipe @ 75" (131S075)
   - One (1) plain pipe @ 73.5" (131P0735)

2. Secure each pipe joint using a Tek screw and tape the screw with duct tape to protect the end panel pocket.

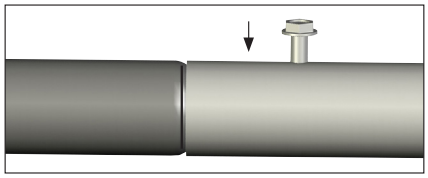

3. Measure *between* the base rails at the desired end of the frame and cut the assembled conduit so it fits between the rails.

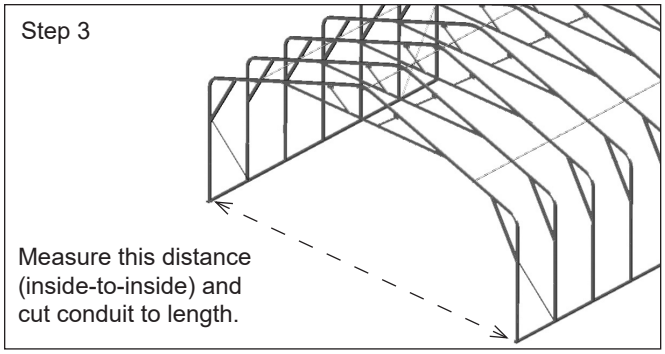

4. Attach one (1) angled bracket (QH1330) to one end of each assembled conduit.

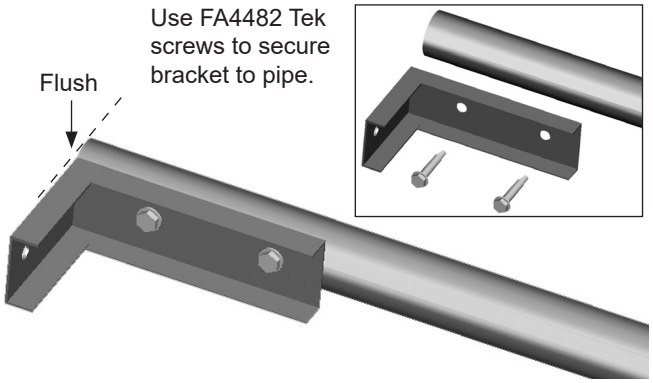

NOTE: Attach the bracket flush with the end of the conduit as shown above.

INSTALL END PANELS

After anchoring the shelter, install the end panels. Both end panels are secured to the end rafters using Tek screws and neo-bonded washers. The screws and washers are evenly spaced along the rafter on the inside of the shelter.

The following steps describe one way to install the end panels. *Use FA4482 Tek screws and 102921 washers.*

1. Unfold and position the end panel with its bottom pocket toward the end wall and center the panel with the end rafter. *Verify that nothing will damage the end panel when spreading it out on the site.*

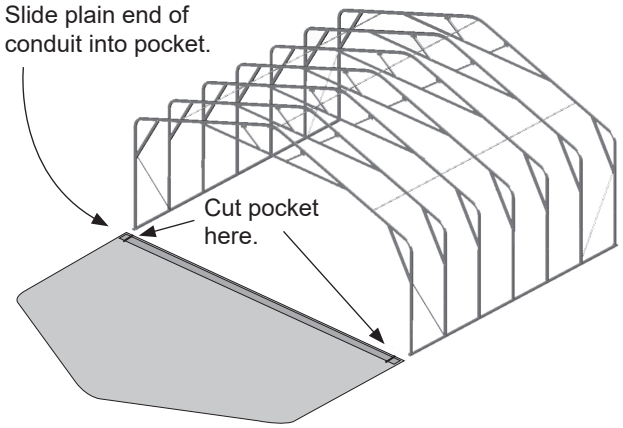

NOTE: For zippered panels, position the panel so that the zippers are centered as desired. Panel shown may differ from the actual panel.

2. Insert the conduit—the end without the attached QH1330 bracket—into the end panel pocket.

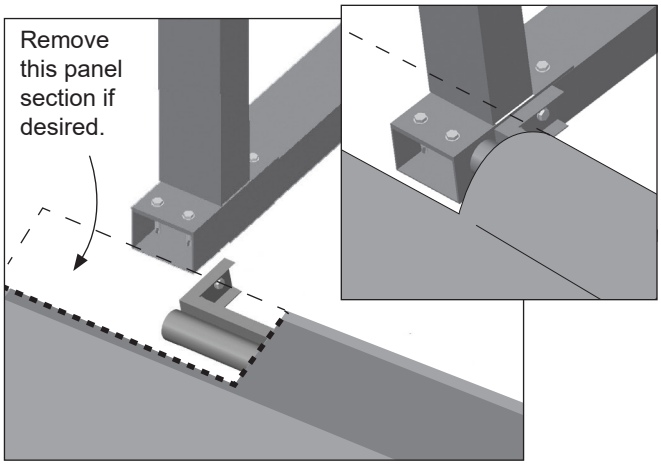

NOTE: For the zippered end panel, DO NOT install the conduit through the door-opening sections of the end panel. Secure bracket using FA4482 Tek screws.

3. Cut the *panel pocket* as shown so that the conduit aligns with the inside edges of the base rail.

   Optional: The excess pocket material can be removed if desired when attaching the panel to the end rafter legs.

INSTALL END PANELS (CONTINUED)

4. Rotate the angled bracket and attach it to the base rail as shown in the diagram below. Use FA4482 Tek screws to secure bracket to base rail.

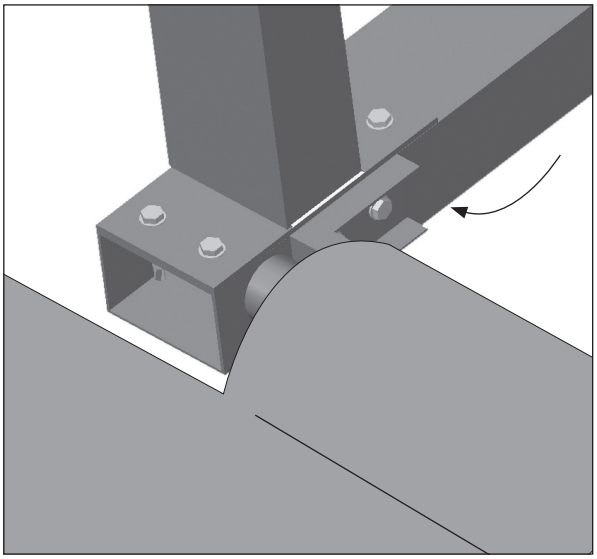

5. Move to the other end of the end panel conduit, slide the end panel just enough to attach another QH1330 angled bracket to the conduit and secure the remaining end of the conduit to the base rail as previously described.

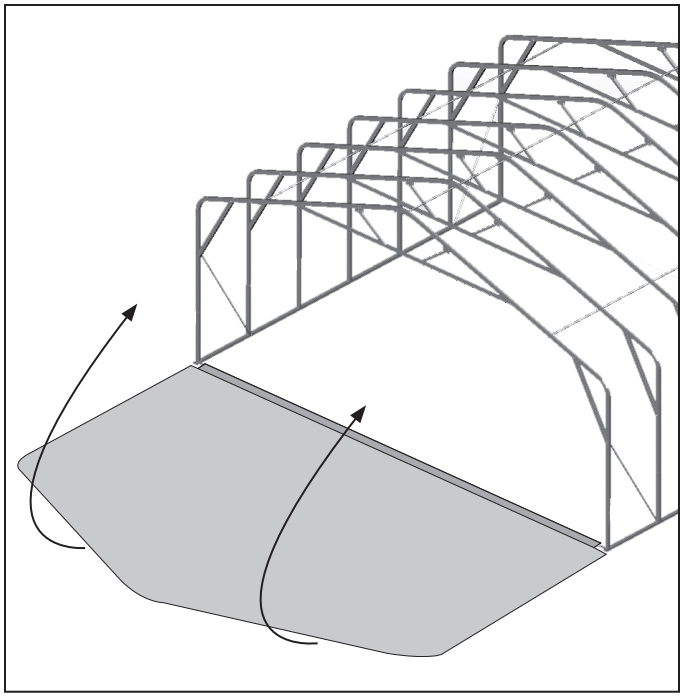

6. Once the conduit of the end panel is secured between the base rails, locate the FA4482 Tek screws and 102921 neo-bonded washers that are used to attach the end panel to the end rafter.

7. Pull the end panel up and over the top of the end rafter and hold it in position.

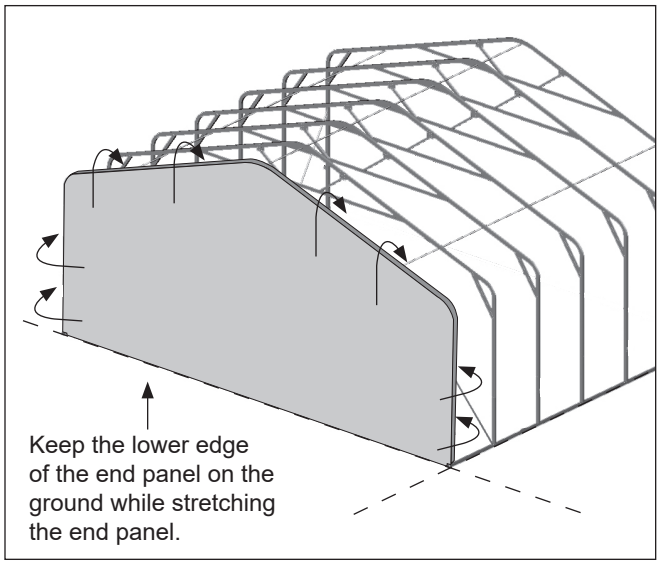

NOTE: Use additional help to pull the end panel into position over the entire rafter. It may be helpful to have someone stand on the conduit near the middle to keep it on the ground when stretching and attaching the end panel. *Do not over-stretch the end panel.*

8. Move to the lower section of the rafter leg and end panel on each side of the rafter, fold the end panel material around the rafter tube, and secure it with Tek screws and washers on the inside of the rafter approximately 12" up from the conduit.

Attaching the panel in this manner keeps the lower section of the end panel in place as the panel is stretched and secured to the rafter.

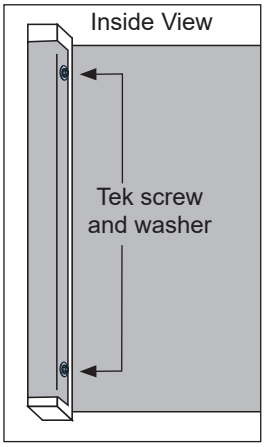

Space the FA4482 screws and 102921 washers evenly at 12"-16" when securing the end panel. Actual screw length may differ from what is shown.

NOTE: Install the screws on the backside or inside surface of the rafter to prevent damage to the main cover when it is installed.

INSTALL END PANELS (CONTINUED)

9. After securing the lower section of the end panel to the end rafter, stretch the panel over the top to remove wrinkles, and secure it in place as previously described. Use additional assistants to properly and evenly stretch the end panel during installation.

   Verify that the conduit inside the panel pocket remains on the ground as the end panel is stretched over and around the end rafter.

   Evenly space the FA4482 screws and 102921 washers (12"-16") along the rafter and pull the end panel tight as the screws are installed. To prevent damage to the main cover, do not install the Tek screws in a position that allows the heads of the screws to contact the main cover when it is installed.

10. Continue attaching the end panel by working evenly down both sides of the rafter toward the base rails.

    NOTE: If necessary, remove the Tek screws at the bottom of each rafter leg to work wrinkles out of the end panel and reinstall the Tek screws.

11. After installing the first end panel, repeat the steps to attach the remaining end panel.

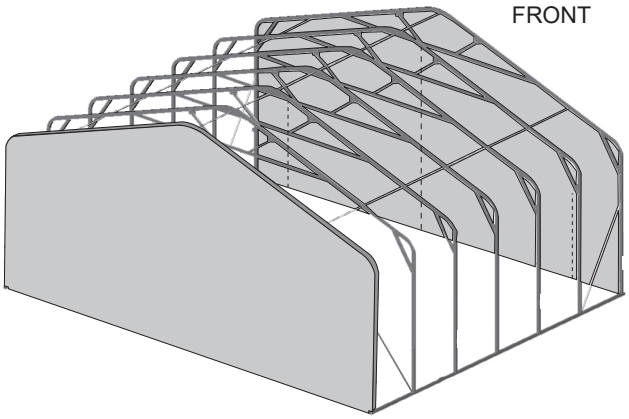

    NOTE: The excess end panel material can be removed or folded and attached to the rafter as described earlier. If the excess is removed, allow at least six inches (6") to remain beyond the Tek screws.

    In the future, if the panel is removed for any reason, the extra material is used to pull the panel tight.

12. After installing both end panels, install ratchets and the main cover.

Space below is reserved for customer notes.

PREPARE MAIN COVER

Gather parts:

- Ratchets (1"), main cover, and Tek screws
- 1.315" x 75" swaged pipe (131S075)
- 1.315" x XX" plain pipe (131P0XX); See Side Profile diagrams in the Quick Start section for pipe identification for your building.

Assembly Procedure

NOTE: When handling the main cover and setting it in position, do not pull on the end straps. They will pull out of the cover.

WARNING: To prevent damage to the cover and to prevent serious personal injury, DO NOT attempt to install the main cover on windy days.

1. Fasten a ratchet to the end conduit using a Tek screw as shown below. The ratchet should be about 6" in from the end of the conduit.

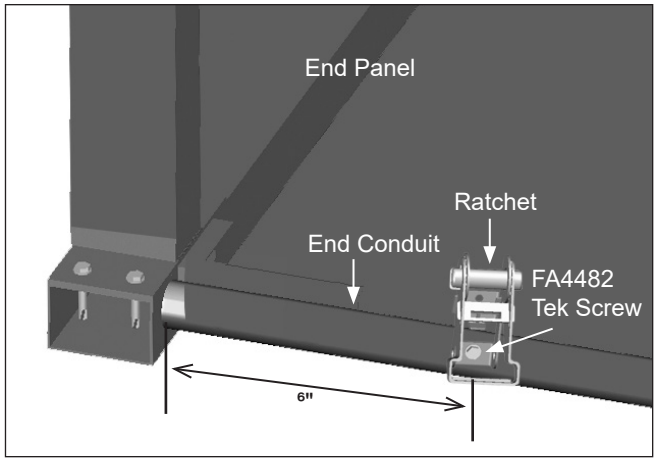

2. Repeat Step 1 at all remaining corners.
3. Assemble two main cover conduits. Consult the Side Profile diagrams for pipe identification for your building.
   a. Locate all sections of pipe needed and insert the swaged end of each pipe into the plain end of another pipe until the conduit is assembled.
   b. Secure each pipe joint with a Tek screw and tape the screw and joint with duct tape.

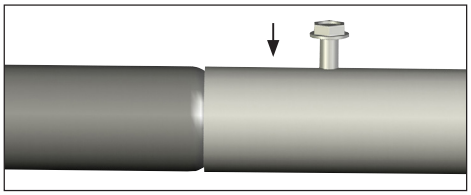

ATTENTION: Cover conduits are inserted into the pockets sealed into the main cover. The conduits are used to tighten and secure the main cover.

4. After assembling the cover conduits, take the main cover and unfold it on a clean, smooth surface near the frame.

   NOTE: Unfold the main cover with the inside surface facing up.

5. Locate the main cover ends with strapping and align with the front and back of the shelter.

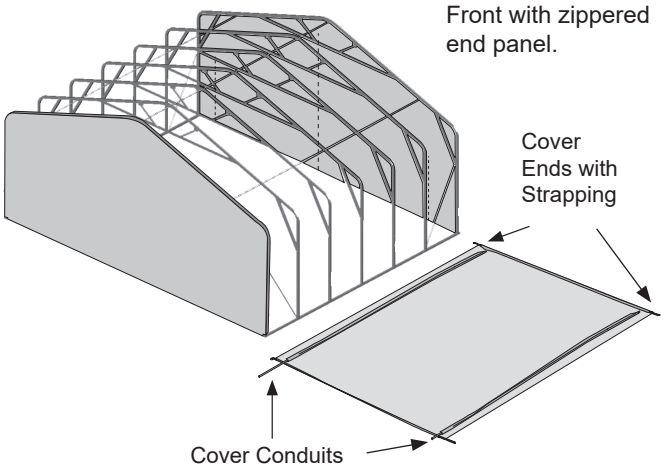

6. Insert the cover conduits into the pockets of the main cover.

   NOTE: Shelter shown above may be of a different length than actual shelter. Do not insert a cover conduit into any pocket that includes a pre-installed strap.

7. Continue by attaching the main cover ratchets and the main cover to the frame.

ATTACH MAIN COVER

Gather parts:

- Main cover (with conduits already inserted)
- Ropes long enough to reach over the frame (provided by customer)
- Ratchets (1"), Tek screws, and 103620B straps
- Box cutter or utility knife

WARNING: To prevent damage to the cover and to prevent serious personal injury, DO NOT attempt to install the main cover on windy days.

Assembly Procedure

1. To pull the cover over the frame, attach ropes to both ends of the cover conduit. Wrap the rope around the conduit a few times to prevent it from slipping off.

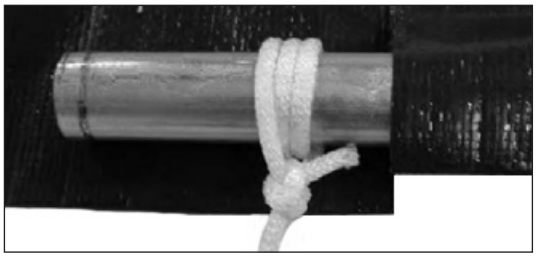

NOTE: Depending on the length of the cover it may be necessary to attach additional ropes to the cover conduit between the end ropes by cutting a small opening in the cover pocket and tying the rope around the conduit. DO NOT cut through the main cover. *Cut through the conduit pocket only.*

2. With all ropes attached to the cover conduit, lift the conduit and carry the cover toward the base of the frame.
3. Toss the ropes over the frame and pull the cover into position. One person is required at each rope.

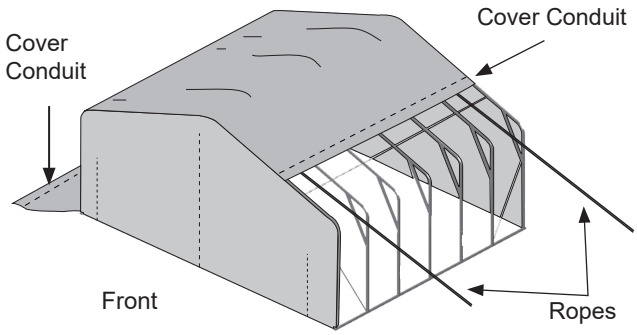

Diagram may show a different shelter length.

4. Once the main cover is pulled into position, center the cover on the frame and loosely secure the ends of the cover to the ratchets attached to the end panel conduits.

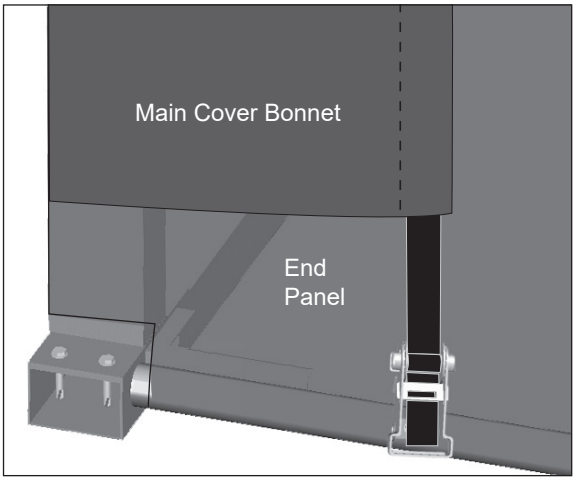

ATTENTION: Do not tighten the straps at this time. *Use ropes to temporarily secure the sides of the cover to the frame if needed.*

5. Divide the remaining number of ratchets in half and place the ratchets on the ground next to the rafter where they will be attached.

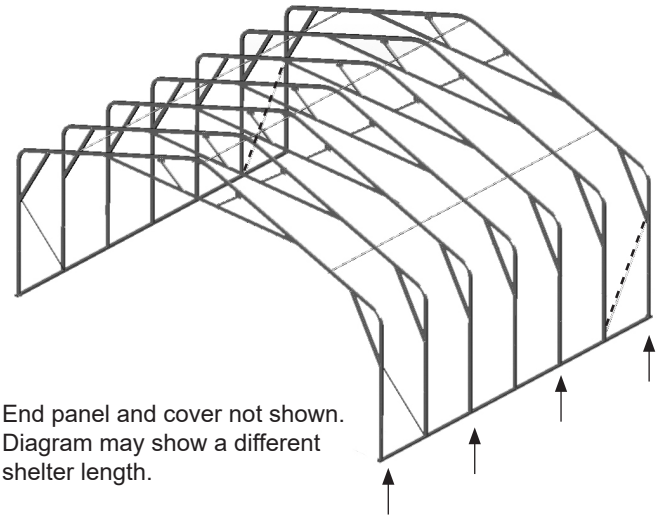

End panel and cover not shown. Diagram may show a different shelter length.

NOTE: Space ratchets evenly along each side of the shelter and directly across from each other on the *same rafter assembly*. Consult the Side Profile diagrams in the Quick Start section for ratchet location details for your building.

Secure ratchets using the FA4482 Tek screws.

ATTACH MAIN COVER (CONTINUED)

6. Lift the cover skirt and using the main cover conduit and strap length as guides, attach the ratchets to the rafters. Fasten ratchets to rafters using Tek screws.

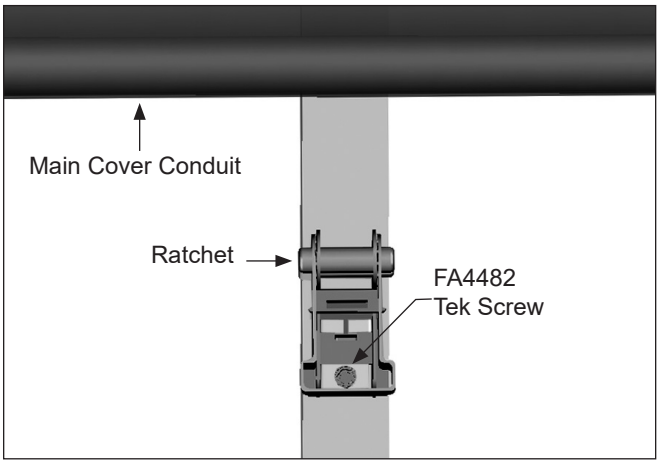

NOTE: Ratchets may be fastened to either the outside (shown) or inside (not shown) of the shelter frame.

7. Carefully lift the cover skirt and cut a slit in the cover conduit pocket at the rafter position. Insert a section of strap through the slit and around the cover conduit.

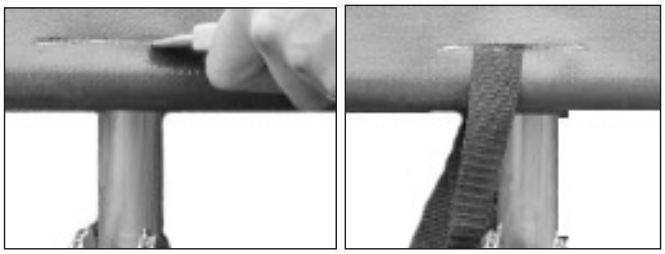

NOTE: DO NOT cut through the main cover. *Cut through the conduit pocket only.*

8. Thread the strap ends into the ratchet and slightly tighten.

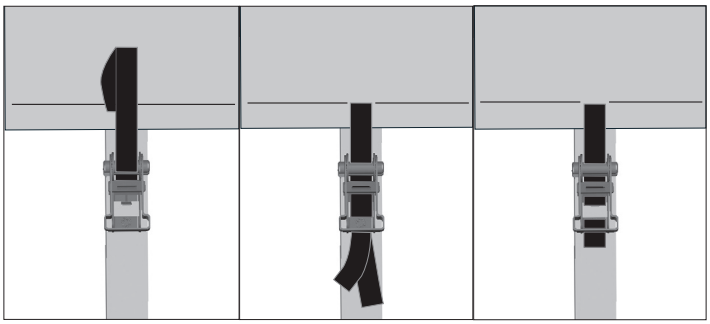

NOTE: It may be necessary to remove excess strap if it binds up in the ratchet.

9. Repeat the steps for the remaining ratchets.

10. Using additional help (if needed) tighten the main cover beginning with the ratchets along the sides of the shelter frame.

11. After the side ratchets are tightened, return to the end ratchets and tighten the bonnet straps of the main cover.

    NOTE: To reposition the cover, loosen all ratchets and then retighten the ratchets.

12. Fold the skirt of main cover down and over the ratchets to complete the installation of the main cover.

    Optional Step: If desired, take the remaining Tek screws and washers and from the outside secure the main cover skirt to the base rail along each side of the frame. Evenly space the Tek screws as previously described..

CARE AND MAINTENANCE

Proper care and maintenance of your garage is important. Check the following items periodically to properly maintain your garage:

- Frequently inspect building and all components.
- Replace damaged or worn parts promptly.
- Regularly check main cover and end panels to see they remain tight and in proper repair.
- Check connections and all fasteners to verify they remain tight.
- Verify that the anchor system is in good repair and all connections and fasteners are tight.
- Do not climb or stand on the shelter at anytime.
- Remove debris and objects that accumulate on shelter. Use tools that will not damage main cover or end panels when removing debris.
- Remove snow to prevent excess accumulation. Use tools that will not damage main cover when removing snow. NEVER ALLOW SNOW TO ACCUMULATE ON THE COVER.
- Check shelter contents to verify that nothing is touching main cover or end panels that could cause damage.
- If shelter is disassembled and moved, inspect all parts and fasteners before use and reassembly.
- For replacement or missing parts, call 1.800.245.9881 for assistance.

NOTE: With the exception of Truss Arch buildings, ClearSpan™ shelters and greenhouses *do not* have any tested loading criteria.

ClearSpan

QUICK START GUIDE

30' Wide Garage

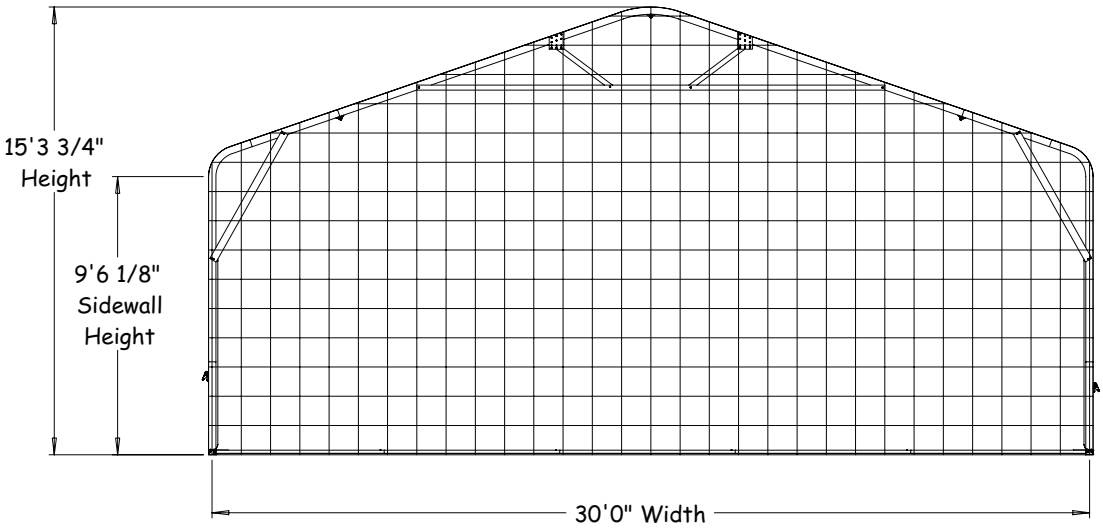

FRONT

Grid Represents 12" Squares

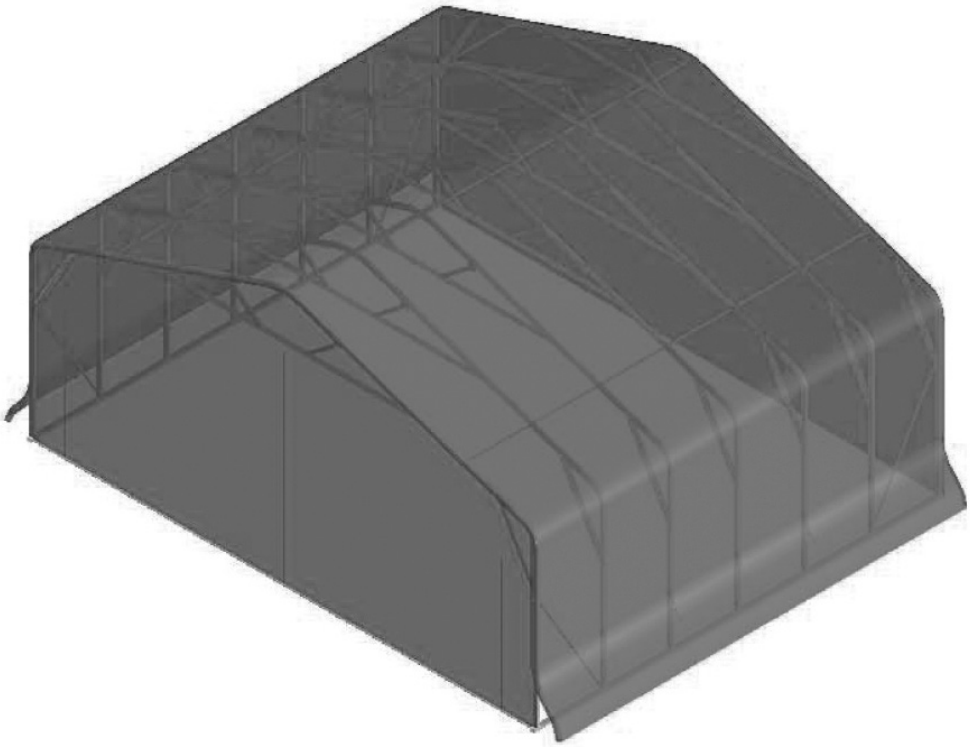

Shelter shown above may be of a different length than actual shelter.

FRONT PROFILE

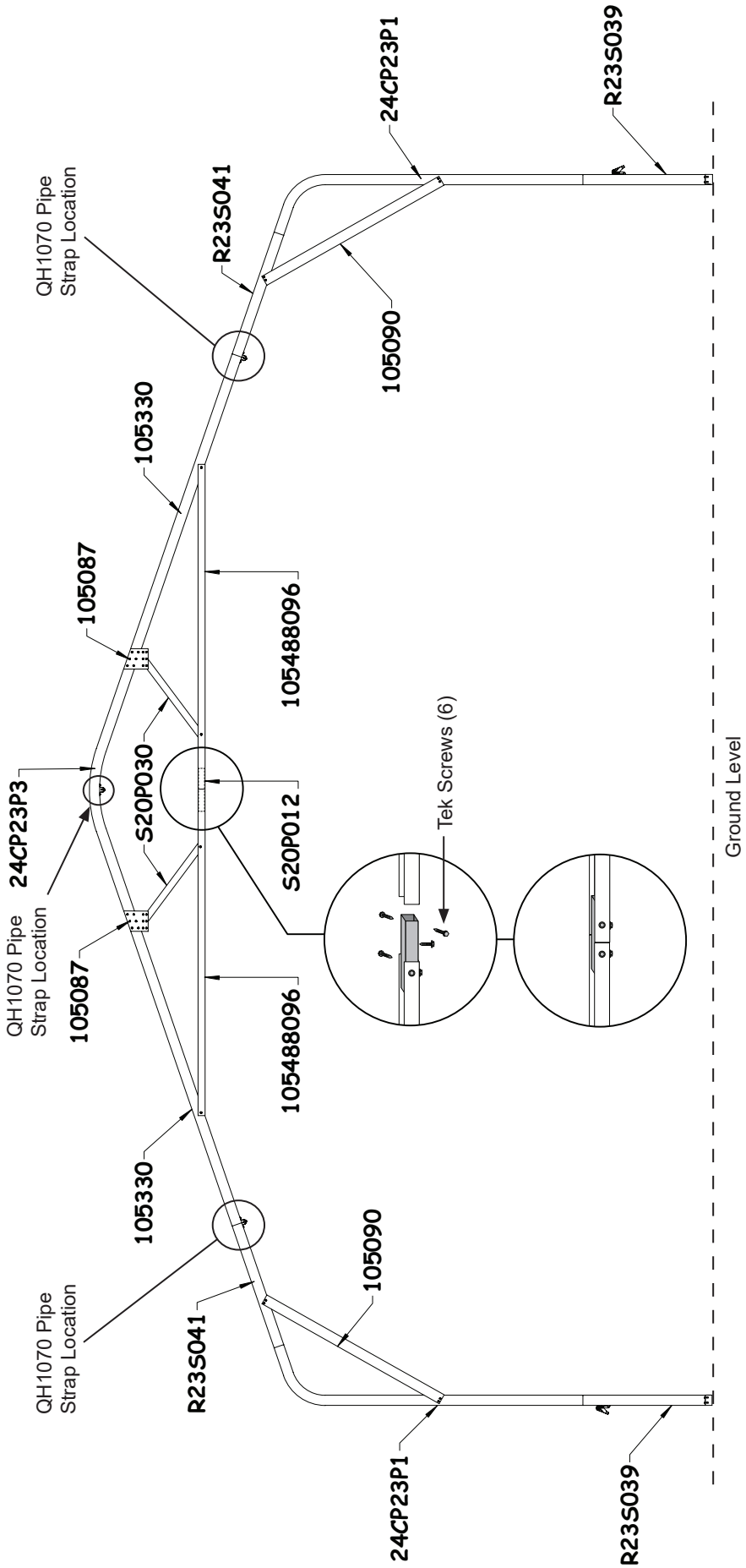

SIDE PROFILE - 107771

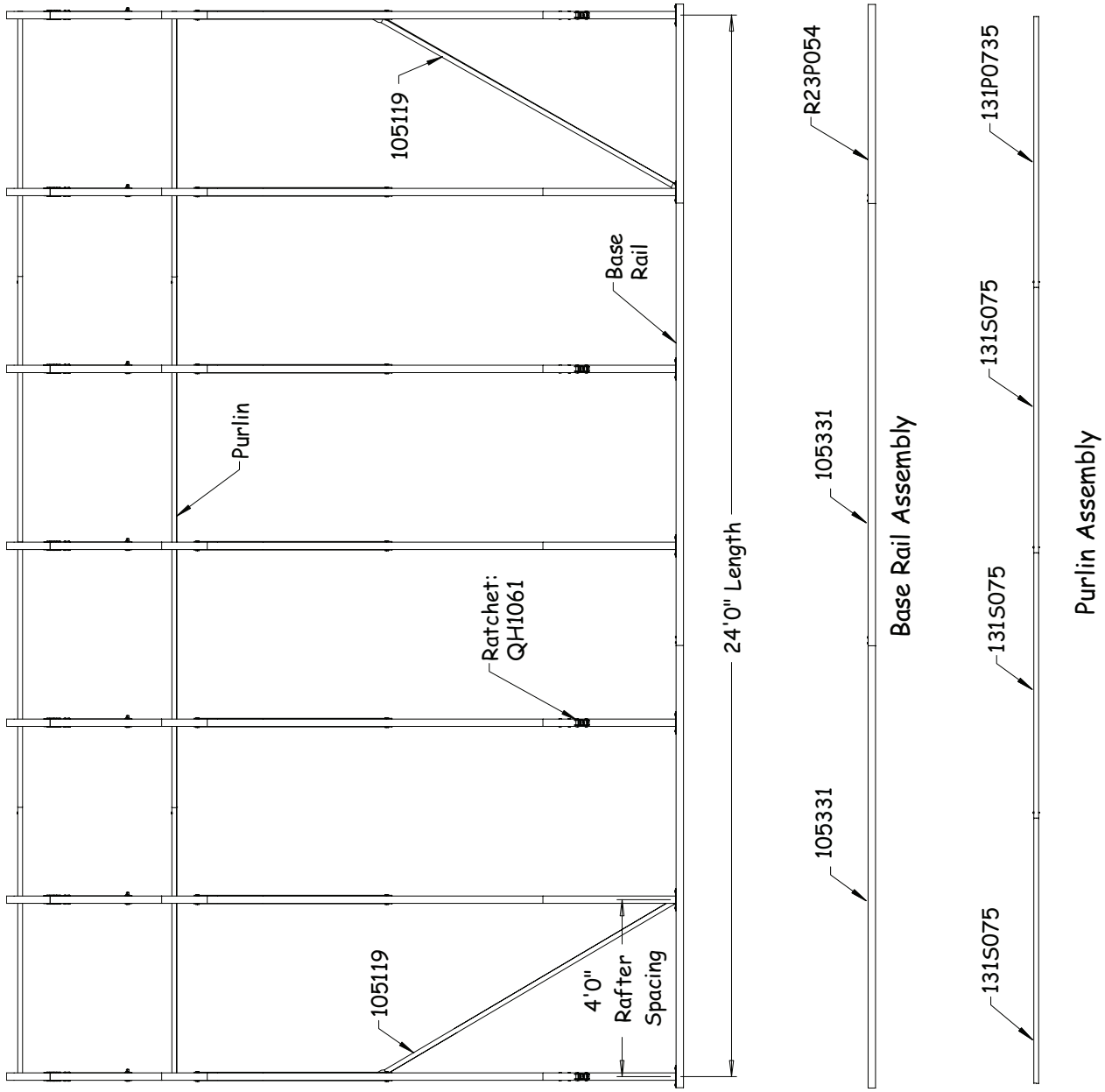

SIDE PROFILE - 107772

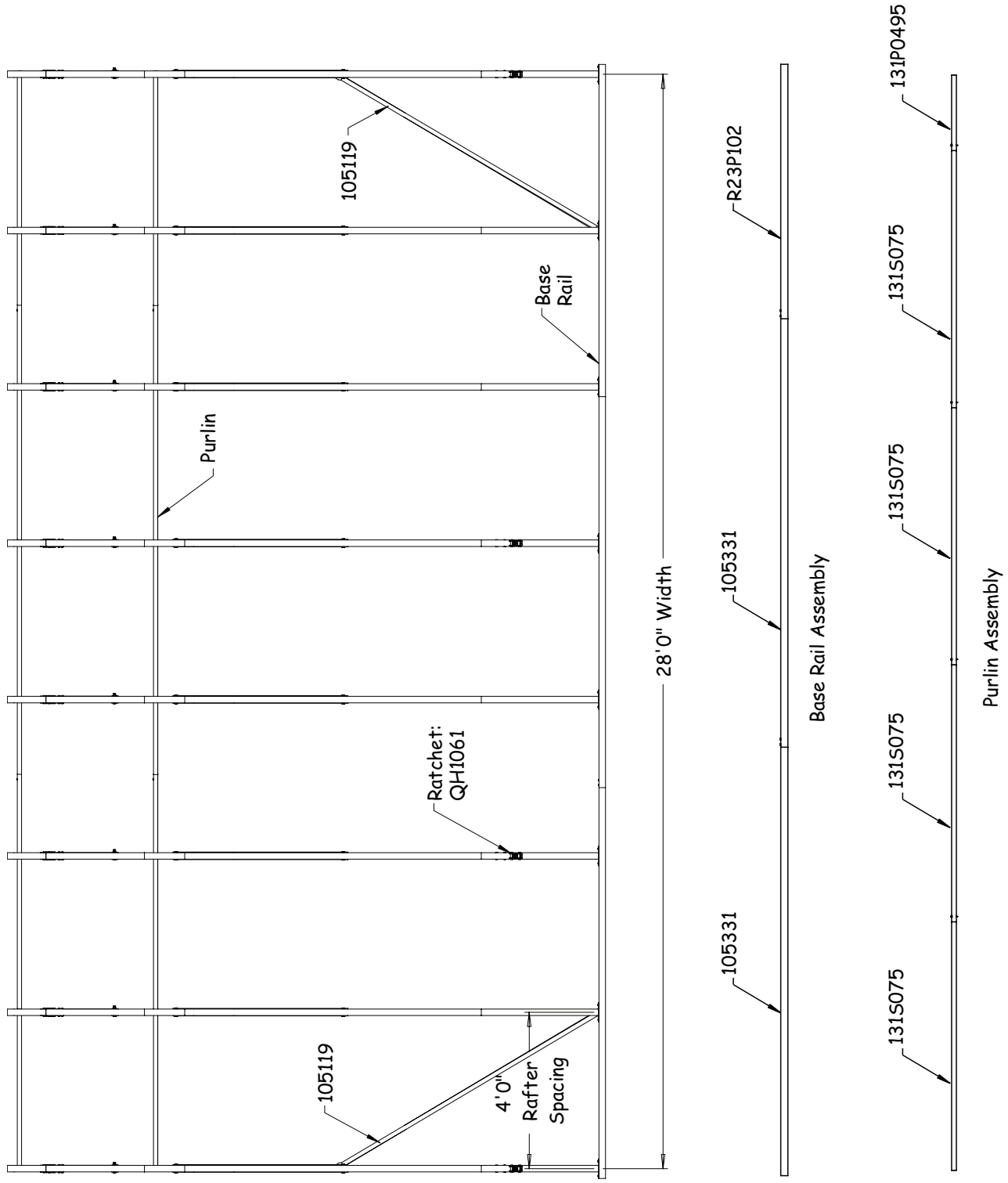

SIDE PROFILE - 107773

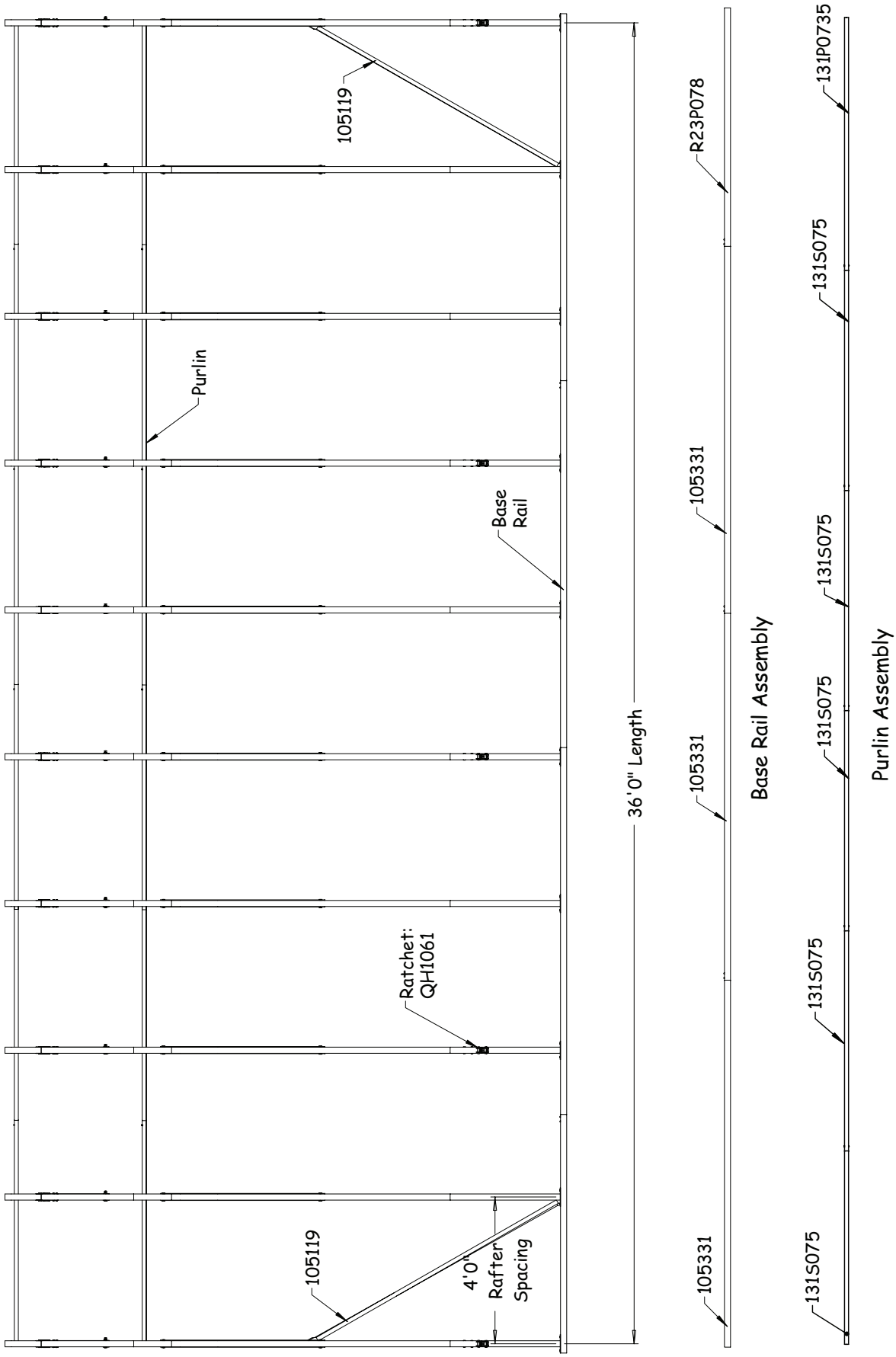

SIDE PROFILE - 107774

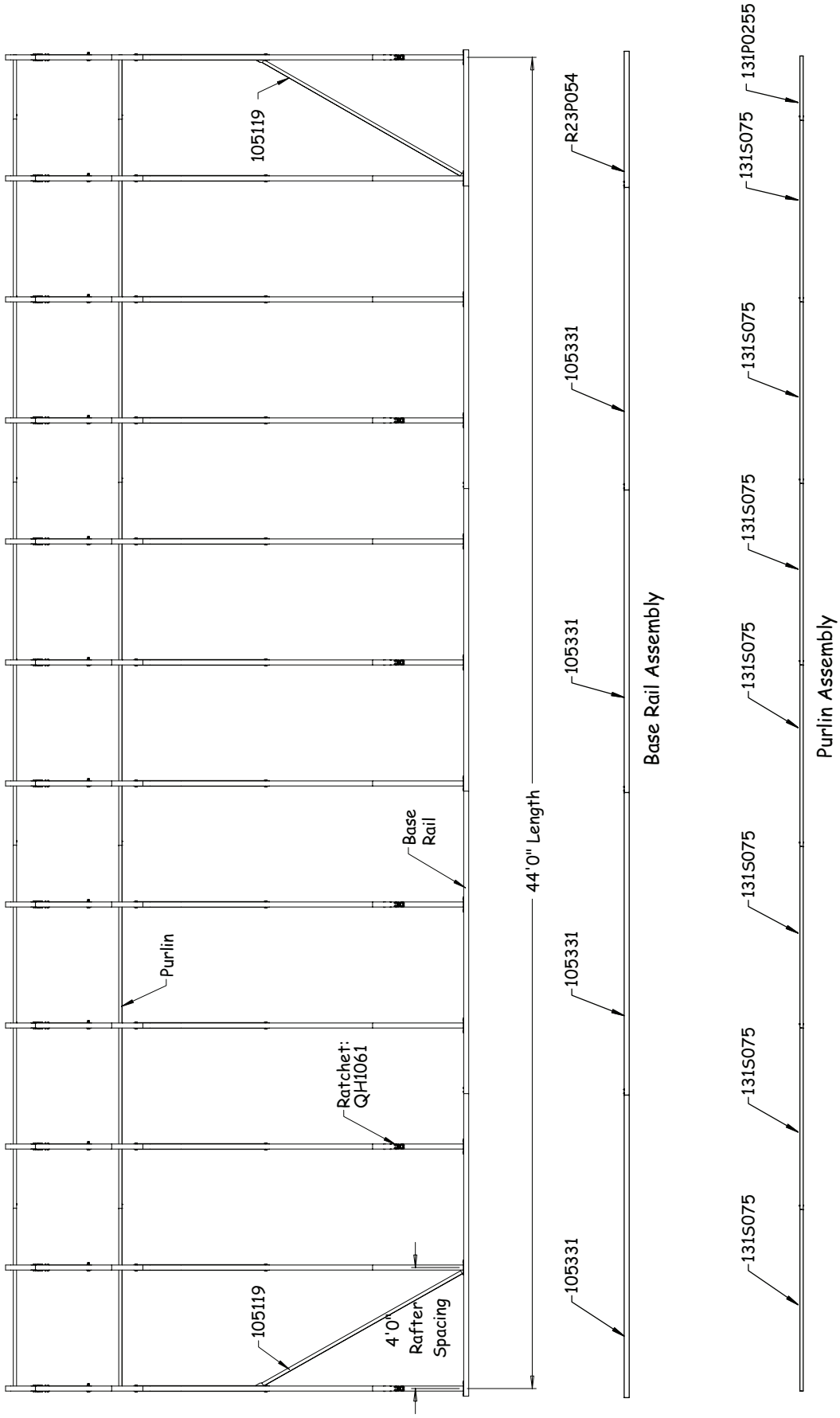

CONNECTIONS

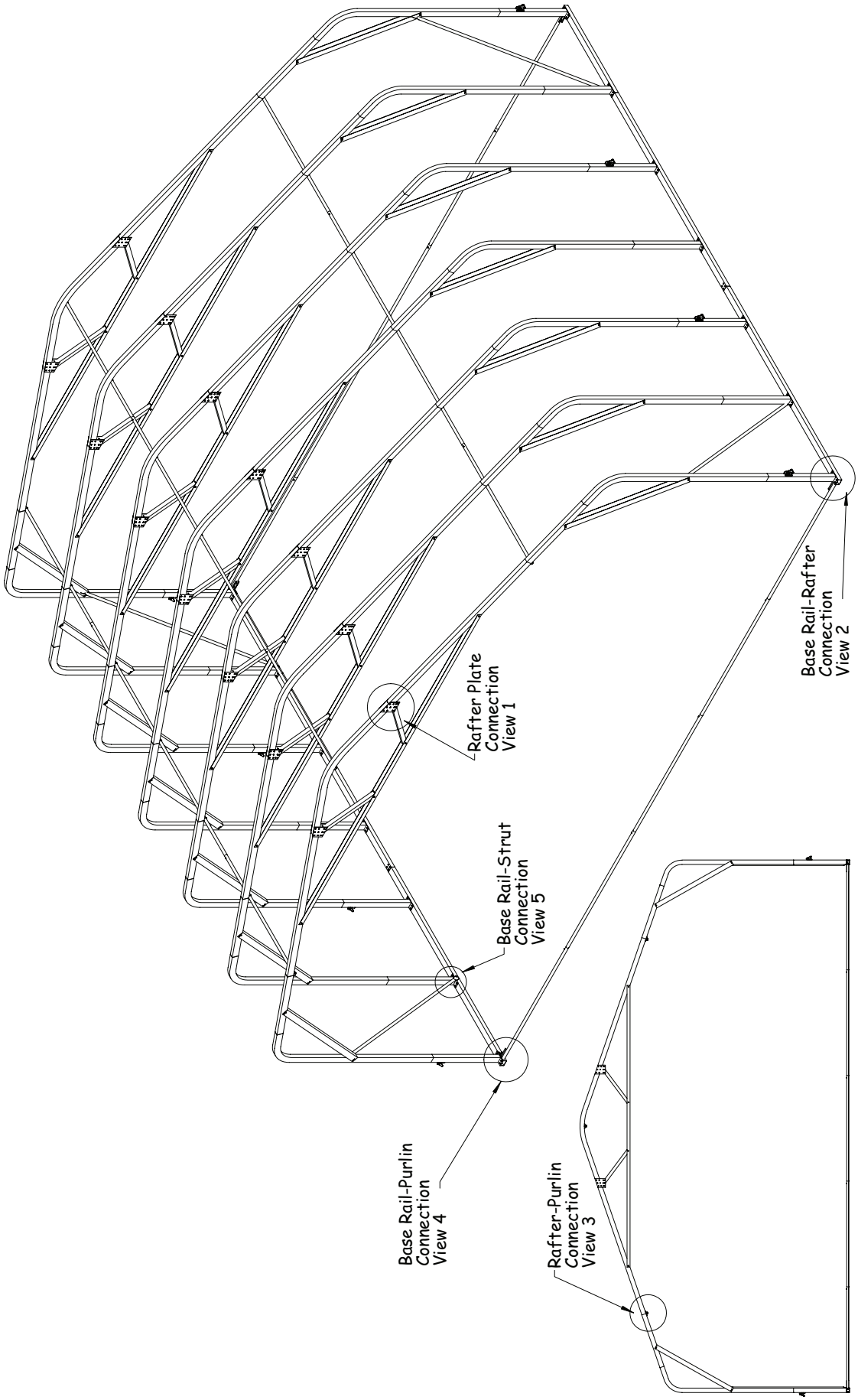

CONNECTION - DETAILS

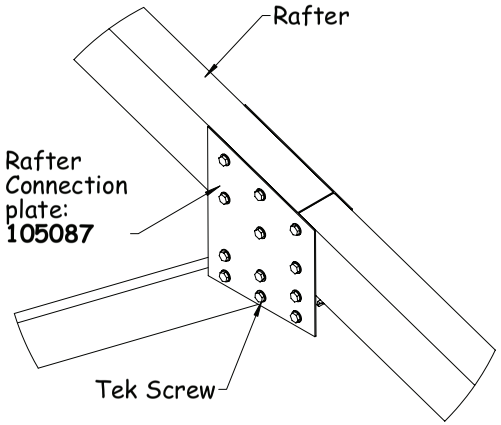

Rafter Plate Connection View 1

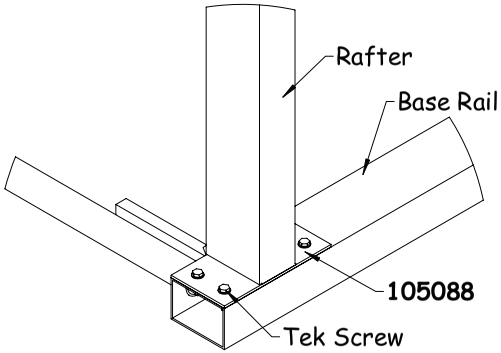

Base Rail-Rafter Connection View 2

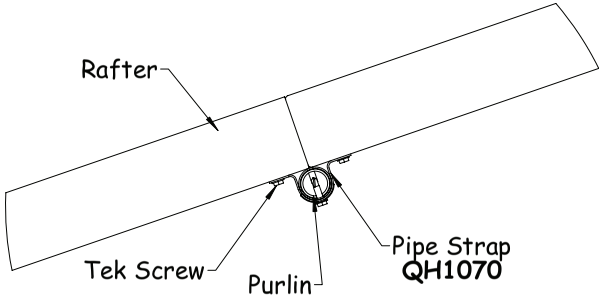

Rafter-Purlin Connection View 3

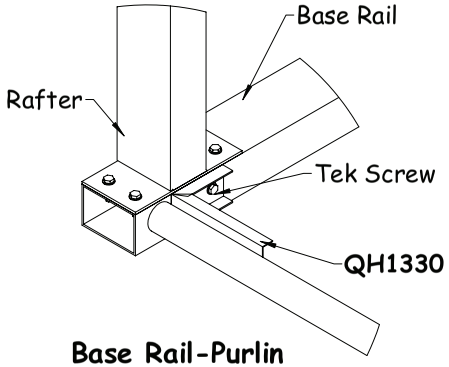

Base Rail-Purlin Connection View 4

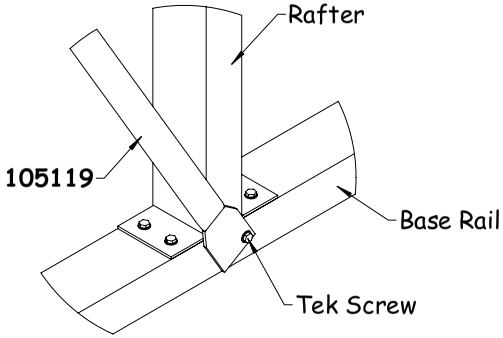

Base Rail-Strut Connection View 5

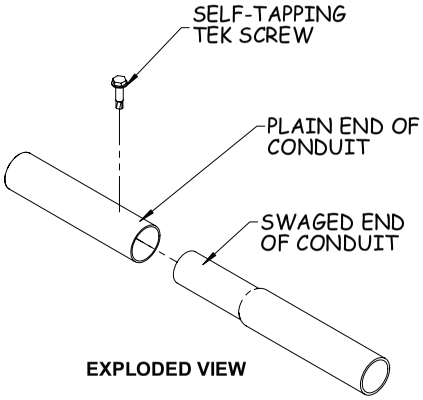

CONDUIT ASSEMBLY